MEASURING TRANSDUCER

GMW – We make your values visible

We provide our customers with our products the entire spectrum to solve everything EMAS tasks and thus tools for sustainable use of electrical energy. As a complete provider we also realize the whole project from A to Z, from project consulting to commissioning, training and maintenance.

- Power grid variables
- Direct current variables
- Process variables
- Summation variables

Measuring transducer

Contents

Power grid variables

Direct current variables

Process variables

Summation variables

SAFETY APPLIANCE TESTERS

LOW- AND MEDIUM-VOLTAGE CURRENT TRANSFORMERS

ENERGY MANAGEMENT

ANALOGUE PANEL METERS

DIGITAL PANEL METERS

MEASURING TRANSDUCERS

TEXT DISPLAYS AND THERMAL PRINTERS

PROBES AND MEASEUREMENT ACCESSORIES

SWITCHBOARD COMPONENTS

ACCESSORIES

General description

Application

Measuring transducers are designed for the conversion and galvanic isolation of varied measuring signals in heavy-current and weak-current engineering. The input variable is converted to a proportional output signal to standard values of e.g. 20 mA and (or) 10 V. A frequency or pulse output is possible as well. Measuring transducers are indispensable where measuring values must be transmitted over long distances or at different locations for indication and evaluation.

Type and function

The output signal is an impressed direct current and (or) direct voltage; it is nonsensitive to interference signals, external magnetic fields as well as to distortion due to signal lines of varying lengths. Within the load range, the accuracy remains uninfluenced by different internal resistances of individual or also several evaluation instruments, like e.g. switchgear and measuring devices, controlling equipment, recorders, PLC systems etc. (when using both outputs simultaneously, the max. current which may be supplied to the voltage output is 1 mA, connecting both outputs is not permissible). In case of most measuring transducers, an auxiliary voltage is generated from the measuring voltage, an additional auxiliary voltage ist not required.
Measuring transducers have a fully electronic design and dispose of no mechanical parts; they are thus largely immune to environmental influences and suited for use under rough operating conditions.

Special features

- Simple installation, no programming required
- Accuracy class 0.5
- Analog (continuous) measurement
- Analog output immune to noise
- Setting option of zero point and span from front side
- Double output
- Calibrated double output switchable at the front using switch between 0-20 mA / 0-10 V and 4-20 mA / 2-10 V for transducers for direct current variables, rms value, process parameters and operands.
- To be combined with frequency output and relay module
- 4 kV test voltage, also in case of DC auxiliary voltage between input, output and auxiliary voltage
- All transducers also with auxiliary voltage for 36-265 V AC + DC or 6-30 V AC + DC and 4 kV test voltage
- Small design (22.5 mm housing width)

General specifications

EMC	DIN EN 61 326
(for DC auxiliary voltage and multi voltage power supply unit)	DIN EN 61 326 Class A
Mechanical strength	DIN EN 61 010 Part 1
Electrical safety	DIN EN 61 010 Part 1 and DIN EN 61 010 Part 2-030 Housing insulated, protection class II ● for working voltages up to 300 V (phase to neutral) pollution degree 2, measuring category CAT III ● for working voltages up to 600 V (phase to neutral) pollution degree 2, measuring category CAT III ● for working voltages up to 1000 V (phase to neutral) pollution degree 2, measuring category CAT III For types MA-1.1s (eff) T/ MV-1.1s (eff) T/ MA-GT.1 / MV-GT.1 / MW-GT.1
Accuracy, overload	DIN EN 60 688
Isolation	DIN EN 61 010 Part 1, 3.7 kV 50 Hz, 10 s
Air and creep distances	DIN EN 61 010 Part 1
IP code	DIN EN 60 529, housing IP 30, terminals IP 20
Connection	DIN 43807
Housing	Polycarbonate (self-extinguishing according to UL 94 V-0)
Max. tightening torque of terminals	0.8 Nm

CCT 31.3 RMS

(Compensation current transformer, All current sensors)

Current transformers for the measurement of direct and alternating currents
• For measuring of non-sinusoidal and distorted networks
• As a measuring transducer for the direct input wiring of SPS input cards

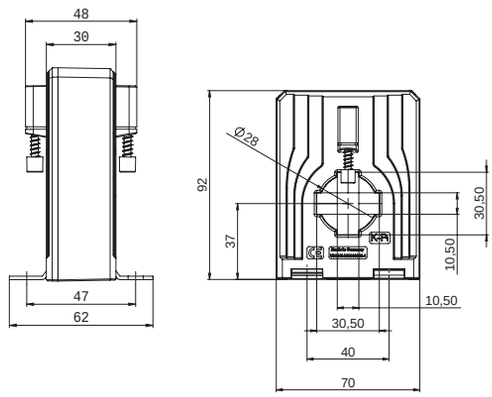

Function

- Electricity is conducted over the magnetic f eld and is captured by the measuring core. The current induced in the measuring core is proportional to the primary current and is captured by a semi-conductor element. An integrated electronic control unit converts the semi-control signal into an output current signal, which is directly proportional to the temporal course of the measured primary value.
- A contactless inductive captured parameter creates a galvanically separated output signal.
- Electrical contact with the secondary circuit of the current transformer is achieved by means of a 4-pole-spring-clamp. This clamp is suitable for connection to a f exible conductor up to 2.5 mm^2.
- A DC auxiliary voltage of ± 12 V is required to supply the electronic controls. The auxiliary voltage input must be secured by a HRC fuse size of 100 mA / 250 V microfuse.

Advantages

- Measuring of direct current as well as alternating current with only one current transformer is possible.
- Large working frequency range from 0 Hz (DC)…100 kHz (AC).
- High electric protection of the galvanically isolated capture of the measured variable.
- Low power-consumption (˝ 2.5 VA)
- Easy and safety electrical connection by means of spring clamp terminal.
- Direct mounting onto the bus bar by means of integrated f xing screws which are part of the unit.
- Mounting onto 35 mm DIN-rail by means of optional supply of snap-on mounting.
- High climatic and mechanical durability, PU-resin hardened enclosures of all electrical components.

Connection

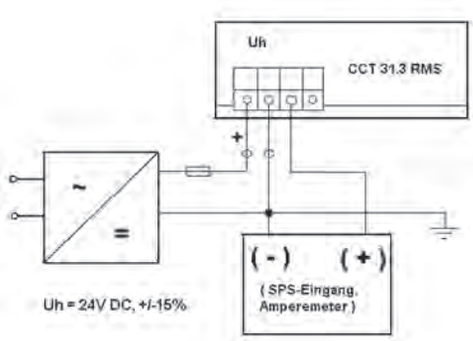

Transfer ratio

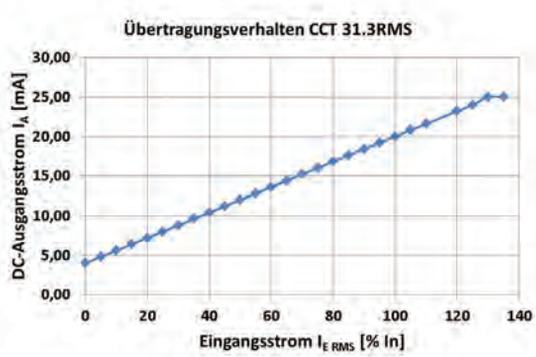

Additional accessories

Snap-on mounting to clip onto
35 mm DIN rail (Art.-no. 10053011)

Technical data

Measuring range	0…300 A DC / 0…300 A I_{RMS} AC, depends on varieties! (Nominal current ranges adjusted to standard values according to IEC)
Frequency range	DC, or AC 20 Hz … 6 kHz, Peak value factor ˝ 4
Current output	4…20 mA DC, RMS measurement
Max. burden resistance at current output	R_B ˝ 500 ˙ (UH = 24 V DC)
Current limit under overload	< 25 mA
Accuracy	± 1,0 %
Max. operating voltage U_m	0,72 kV, U_{e^-}
Isolation test voltage	6,4 kV, U_{e^-}, 50 Hz, 5 sec., primary conductor against measuring output / housing
Auxiliary voltage:	24 V ± 15 % DC, < 70 mA, external protection via microfuse 250 mA / 250 V, fast!
Step response time (90 % IPN, di/dt = 100 A / µs)	˝ 200 ms (t yp. 150 ms)
Signal rise speed di/dt	< 100 A / µs
Isolation class	E
Protection class	IP 20
Operating altitude	˝ 2000 m (DIN EN 61010-1)
Max. temperature of the primary conductor	100° C
Operating temperature	-25° C < T_U < +60° C, 0…95% rH, without condensation
Storage temperature	-40° C < T_L < +90° C

Dimensions

Bus bar	30 x 10 mm
Round conductor	28 mm
Transformer width	70 mm
Transformer height	92 mm
Transformer depth	48 mm

Applicable technical standards

DIN EN 50178, 1997
DIN EN 61010-1, 2002
VDE 0160

Electric connections

U_H + 0 (Ground) I_A
Spring clamp terminal

Connection cross sections	0.08…2.5 mm²

Order list

Primary current I_{RMS} [A]	Art. - no.	Current output
50	1001103-10001	4...20 mA DC
100	1001103-10003	
150	1001103-10005	
200	1001103-10006	
250	1001103-10007	
300	1001103-10008	

CCT 31.3 I

(Compensation current transformer, All current sensors)

Current transformers for the measurement of direct and alternating currents
- For measuring of non-sinusoidal and distorted networks
- As a measuring transducer for the direct input wiring of SPS input cards

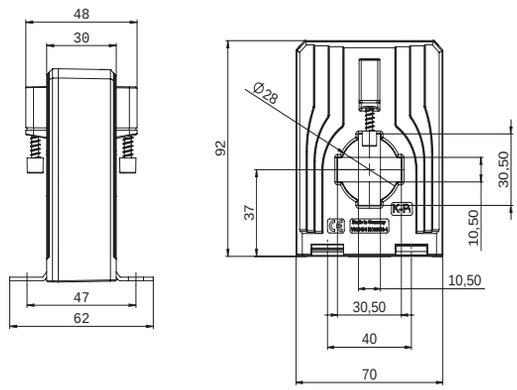

Function

- Electricity is conducted over the magnetic f eld and is captured by the measuring core. The current induced in the measuring core is proportional to the primary current and is captured by a semi-conductor element. An integrated electronic control unit converts the semi-control signal into an output current signal, which is directly proportional to the temporal course of the measured primary value.
- A contactless inductive captured parameter creates a galvanically separated output signal.
- Electrical contact with the secondary circuit of the current transformer is achieved by means of a 4-pole-spring-clamp. This clamp is suitable for connection to a f exible conductor up to 2.5 mm^2.
- A DC auxiliary voltage of ± 12 V is required to supply the electronic controls. The auxiliary voltage input must be secured by a HRC fuse size of 100 mA / 250 V microfuse.

Advantages

- Measuring of direct current as well as alternating current with only one current transformer is possible.
- Large working frequency range from 0 Hz (DC)…100 kHz (AC).
- High electric protection of the galvanically isolated capture of the measured variable.
- Low power-consumption (˜ 2.5 VA)
- Easy and safety electrical connection by means of spring clamp terminal.
- Direct mounting onto the bus bar by means of integrated f xing screws which are part of the unit.
- Mounting onto 35 mm DIN-rail by means of optional supply of snap-on mounting.
- High climatic and mechanical durability, PU-resin hardened enclosures of all electrical components.

Connection

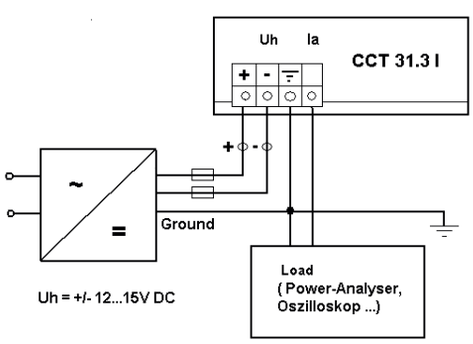

Transfer ratio

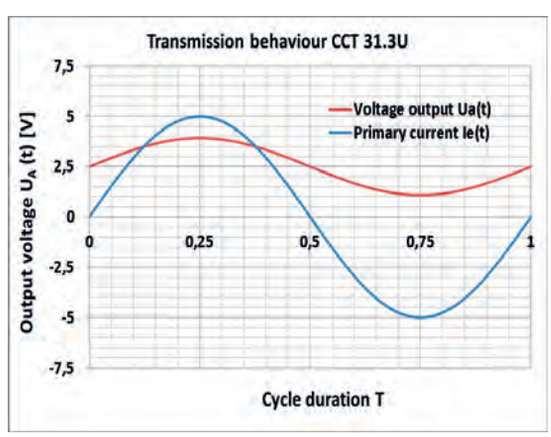

Additional accessories

Snap-on mounting to clip onto
35 mm DIN rail (Art.-no. 10053011)

Technical data

Measuring range	0…300 A DC / AC I_{e^-}, depends on varieties! (Nominal current ranges adjusted to standard values according to IEC)
Frequency range	0...100 kHz, any signal curves
Current output at AC-input signal	AC: 0…20 mA I_{e^-}, (± 28.2843 mA I_{Peak})
Current output at DC-input signal	DC: 0... ± 20 mA
Max. burden resistance at current output	R_B ˝ 200 ˙ (U_H = 24 V DC)
Current limit under overload	< 25 mA
Accuracy	± 0,5 %
Max. operating voltage U_m	0,72 kV, U_{e^-}
Isolation test voltage	6,4 kV, U_{e^-}, 50 Hz, 5 sec., primary conductor against measuring output / housing
Auxiliary voltage:	± 12 V DC, ± 15 %, < 70 mA, external protection via microfuse 100 mA / 250 V, fast!
Energia response time (90 % I_{PN}, di/dt = 100 A / µs)	˝ 1 µs (t yp. 150 ms)
Signal rise speed di/dt	< 100 A / µs
Isolation class	E
Protection class	IP 20
Operating altitude	˝ 2000 m (DIN EN 61010-1)
Max. temperature of the primary conductor	100° C
Operating temperature	-25° C < T_U < +60° C, 0…95% rH, without condensation
Storage temperature	-40° C < T_L < +90° C

Dimensions

Bus bar	30 x 10 mm
Round conductor	28 mm
Transformer width	70 mm
Transformer height	92 mm
Transformer depth	48 mm

Applicable technical standards

DIN EN 50178, 1997
DIN EN 61010-1, 2002
VDE 0160

Electric connections

U_H + 0 (Ground) I_A
Spring clamp terminal

Connection cross sections	0.08…2.5 mm²

Order list

Primary current [A] DC / AC (Ie˝)	Art. - no.	Current output
50	1001101-10001	DC: 0... ±20 mA AC: 0...20 mA I_{e^-}
100	1001101-10003	
150	1001101-10005	
200	1001101-10006	
250	1001101-10007	
300	1001101-10008	

CCT 31.3 U

(Compensation current transformer, All current sensors)

Current transformers for the measurement of direct and alternating currents
- For measuring of non-sinusoidal and distorted networks
- As a measuring transducer for the direct input wiring of SPS input cards

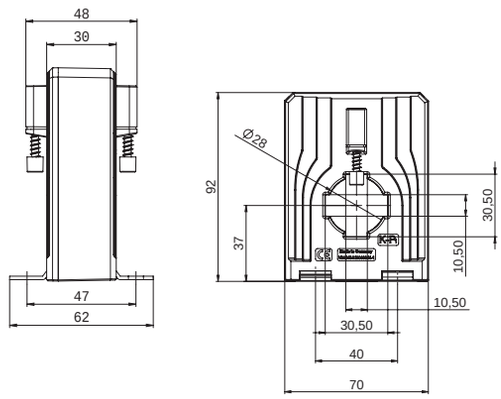

Function

- Electricity is conducted over the magnetic f eld and is captured by the measuring core. The current induced in the measuring core is proportional to the primary current and is captured by a semi-conductor element. An integrated electronic control unit converts the semi-control signal into an output current signal, which is directly proportional to the temporal course of the measured primary value.
- A contactless inductive captured parameter creates a galvanically separated output signal.
- Electrical contact with the secondary circuit of the current transformer is achieved by means of a 4-pole-spring-clamp. This clamp is suitable for connection to a f exible conductor up to 2.5 mm^2.
- A DC auxiliary voltage of ± 12 V is required to supply the electronic controls. The auxiliary voltage input must be secured by a HRC fuse size of 100 mA / 250 V microfuse.

Advantages

- Measuring of direct current as well as alternating current with only one current transformer is possible.
- Large working frequency range from 0 Hz (DC)…100 kHz (AC).
- High electric protection of the galvanically isolated capture of the measured variable.
- Low power-consumption (˜ 2.5 VA)
- Easy and safety electrical connection by means of spring clamp terminal.
- Direct mounting onto the bus bar by means of integrated f xing screws which are part of the unit.
- Mounting onto 35 mm DIN-rail by means of optional supply of snap-on mounting.
- High climatic and mechanical durability, PU-resin hardened enclosures of all electrical components.

Connection

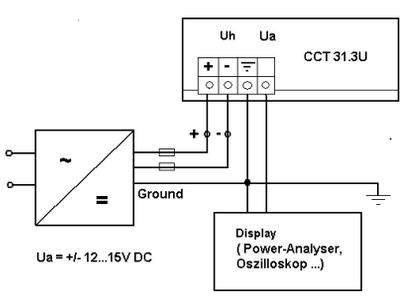

Transfer ratio

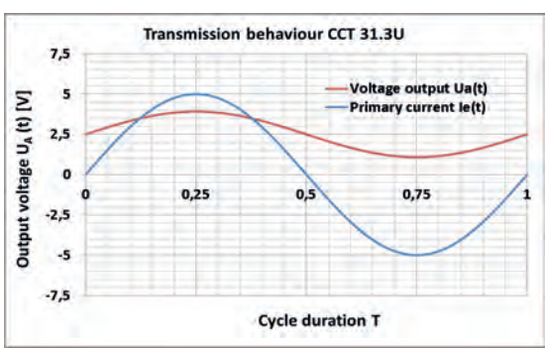

Additional accessories

Snap-on mounting to clip onto
35 mm DIN rail (Art.-no. 10053011))

Technical data

Measuring range	0…300 A DC / AC I_{e^-}, depends on varieties! (Nominal current ranges adjusted to standard values according to IEC)
Frequency range	0...100 kHz, any signal curves
Voltage output at AC-input signal	2,5 ± 1 V, U_{e^-}, AC; 2,5 ± 1,414 V (Peak-Peak)
Voltage output at DC-input signal	2,5 ± 1 V, DC
Max. burden resistance at current output	R_B ˝ 100 ˙
Current limit under overload	< 5 V
Accuracy	± 0,5 %
Max. operating voltage U_m	0,72 kV, U_{e^-}
Isolation test voltage	6,4 kV, U_{e^-}, 50 Hz, 5 sec., primary conductor against measuring output / housing
Auxiliary voltage:	± 12 V DC, ± 15 %, < 70 mA, external protection via microfuse 100 mA / 250 V, fast!
Energia response time (90 % I_{PN}, di/dt = 100 A / µs)	˝ 1 µs (t yp. 150 ms)
Signal rise speed di/dt	< 100 A / µs
Isolation class	E
Protection class	IP 20
Operating altitude	˝ 2000 m (DIN EN 61010-1)
Max. temperature of the primary conductor	100° C
Operating temperature	-25° C < T_U < +60° C, 0…95% rH, without condensation
Storage temperature	-40° C < T_L < +90° C

Dimensions

Bus bar	30 x 10 mm
Round conductor	28 mm
Transformer width	70 mm
Transformer height	92 mm
Transformer depth	48 mm

Applicable technical standards

DIN EN 50178, 1997
DIN EN 61010-1, 2002
VDE 0160

Electric connections

U_H + 0 (Ground) I_A
Spring clamp terminal

Connection cross sections: 0.08…2.5 mm²

Order list

Primary current I_{e^-} [A] DC / AC (I_{e^-})	Art. - no.	Voltage output
50	1001102-10001	DC: 2.5 ± 1V AC: 2.5 ± 1,414 V (Peak-Peak)
100	1001102-10003	
150	1001102-10005	
200	1001102-10006	
250	1001102-10007	
300	1001102-10008	

CCT 41.4 RMS

(Compensation current transformer, All current sensors)

Current transformers for the measurement of direct and alternating currents
- For measuring of non-sinusoidal and distorted networks
- As a measuring transducer for the direct input wiring of SPS input cards

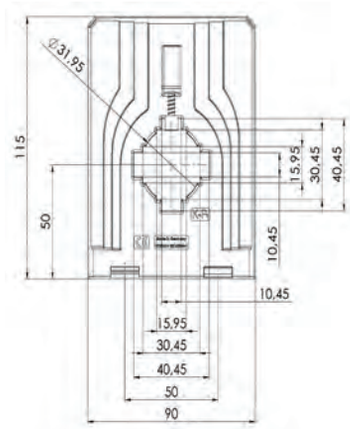

Function

- Electricity is conducted over the magnetic f eld and is captured by the measuring core. The current induced in the measuring core is proportional to the primary current and is captured by a semi-conductor element. An integrated electronic control unit converts the semi-control signal into an output current signal, which is directly proportional to the temporal course of the measured primary value.
- A contactless inductive captured parameter creates a galvanically separated output signal.
- Electrical contact with the secondary circuit of the current transformer is achieved by means of a 4-pole-spring-clamp. This clamp is suitable for connection to a f exible conductor up to 2.5 mm^2.
- A DC auxiliary voltage of ± 12 V is required to supply the electronic controls. The auxiliary voltage input must be secured by a HRC fuse size of 100 mA / 250 V microfuse.

Advantages

- Measuring of direct current as well as alternating current with only one current transformer is possible.
- Large working frequency range from 0 Hz (DC)…100 kHz (AC).
- High electric protection of the galvanically isolated capture of the measured variable.
- Low power-consumption (˜ 2.5 VA)
- Easy and safety electrical connection by means of spring clamp terminal.
- Direct mounting onto the bus bar by means of integrated f xing screws which are part of the unit.
- Mounting onto 35 mm DIN-rail by means of optional supply of snap-on mounting.
- High climatic and mechanical durability, PU-resin hardened enclosures of all electrical components.

Connection

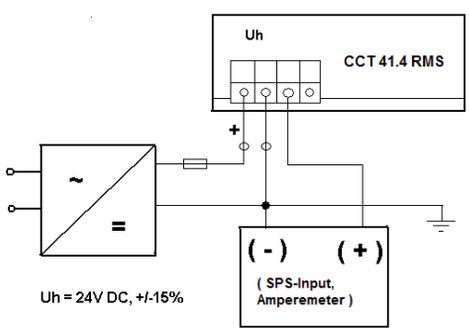

Transfer ratio

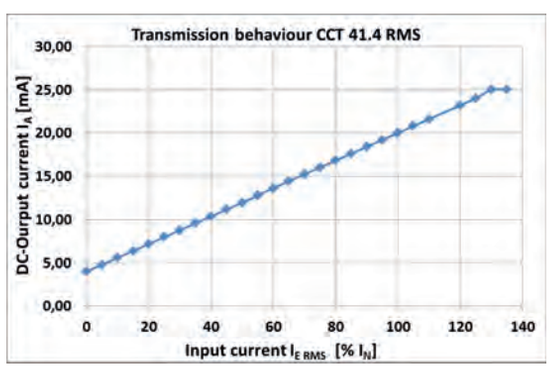

Additional accessories

Snap-on mounting to clip onto
35 mm DIN rail (Art.-no. 10055012)

Technical data

Measuring range	0…500 A DC / 0…500 A I_{RMS} AC, depends on varieties! (Nominal current ranges adjusted to standard values according to IEC)
Frequency range	DC, or AC 20 Hz … 6 kHz, Peak value factor ˝ 4
Current output	4…20 mA DC, RMS measurement
Max. burden resistance at current output	R_B ˝ 500 ˙ (UH = 24 V DC)
Current limit under overload	< 25 mA
Accuracy	± 1,0 %
Max. operating voltage U_m	0,72 kV, U_{e^-}
Isolation test voltage	6,4 kV, U_{e^-}, 50 Hz, 5 sec., primary conductor against measuring output / housing
Auxiliary voltage:	24 V ± 15 % DC, < 70 mA, external protection via microfuse 250 mA / 250 V, fast!
Step response time (90 % IPN, di/dt = 100 A / µs)	˝ 200 ms (t yp. 150 ms)
Signal rise speed di/dt	< 100 A / µs
Isolation class	E
Protection class	IP 20
Operating altitude	˝ 2000 m (DIN EN 61010-1)
Max. temperature of the primary conductor	100° C
Operating temperature	-25° C < T_U < +60° C, 0…95% rH, without condensation
Storage temperature	-40° C < T_L < +90° C

Dimensions

Bus bar 1	40 x 10 mm
Bus bar 2	30 x 15 mm
Round conductor	31,5 mm
Transformer width	90 mm
Transformer height	115 mm
Transformer depth	58,5 mm

Applicable technical standards

DIN EN 50178, 1997
DIN EN 61010-1, 2002
VDE 0160

Electric connections

U_H + 0 (Ground) I_A
Spring clamp terminal

Connection cross sections	0.08…2.5 mm²

Order list

Primary current I_{RMS} [A]	Art. - no.	Current output
150	1001203-10001	4...20 mA DC
200	1001203-10003	
250	1001203-10005	
300	1001203-10006	
400	1001203-10007	
500	1001203-10008	

CCT 41.4 I

(Compensation current transformer, All current sensors)

Current transformers for the measurement of direct and alternating currents
- For measuring of non-sinusoidal and distorted networks
- As a measuring transducer for the direct input wiring of SPS input cards

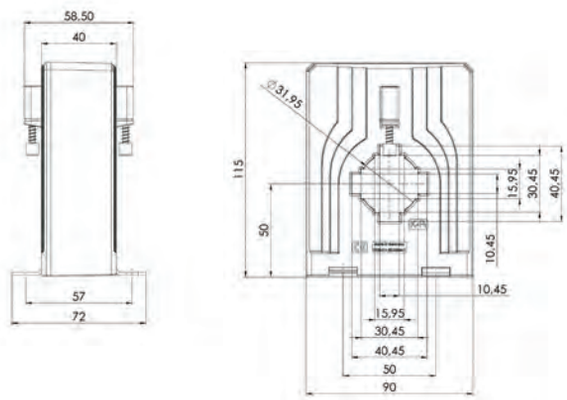

Function

- Electricity is conducted over the magnetic f eld and is captured by the measuring core. The current induced in the measuring core is proportional to the primary current and is captured by a semi-conductor element. An integrated electronic control unit converts the semi-control signal into an output current signal, which is directly proportional to the temporal course of the measured primary value.
- A contactless inductive captured parameter creates a galvanically separated output signal.
- Electrical contact with the secondary circuit of the current transformer is achieved by means of a 4-pole-spring-clamp. This clamp is suitable for connection to a f exible conductor up to 2.5 mm^2.
- A DC auxiliary voltage of ± 12 V is required to supply the electronic controls. The auxiliary voltage input must be secured by a HRC fuse size of 100 mA / 250 V microfuse.

Advantages

- Measuring of direct current as well as alternating current with only one current transformer is possible.
- Large working frequency range from 0 Hz (DC)…100 kHz (AC).
- High electric protection of the galvanically isolated capture of the measured variable.
- Low power-consumption (˝ 2.5 VA)
- Easy and safety electrical connection by means of spring clamp terminal.
- Direct mounting onto the bus bar by means of integrated f xing screws which are part of the unit.
- Mounting onto 35 mm DIN-rail by means of optional supply of snap-on mounting.
- High climatic and mechanical durability, PU-resin hardened enclosures of all electrical components.

Connection

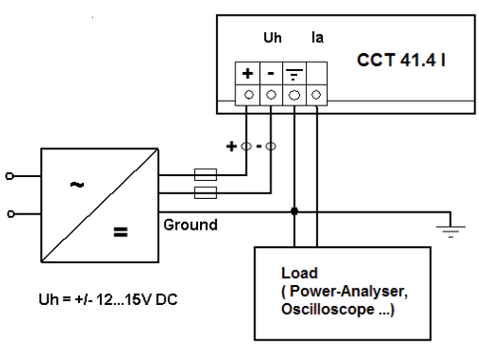

Transfer ratio

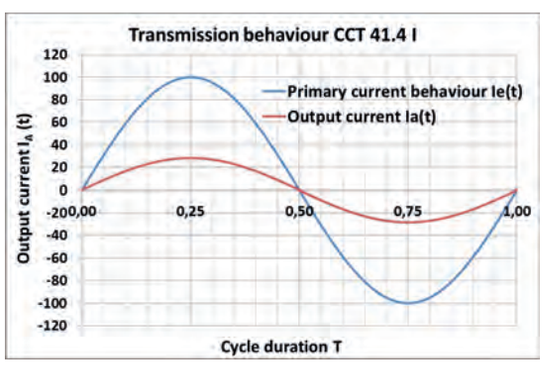

Additional accessories

Snap-on mounting to clip onto
35 mm DIN rail (Art.-no. 10053011)

Technical data

Measuring range	0…500 A DC / AC I_{e^-}, depends on varieties! (Nominal current ranges adjusted to standard values according to IEC)
Frequency range	0...100 kHz, any signal curves
Current output at AC-input signal	AC: 0…20 mA I_{e^-}, (± 28.2843 mA I_{Peak})
Current output at DC-input signal	DC: 0... ± 20 mA
Max. burden resistance at current output	R_B ˝ 200 ˙ (U_H = 24 V DC)
Current limit under overload	< 25 mA
Accuracy	± 0,5 %
Max. operating voltage U_m	0,72 kV, U_{e^-}
Isolation test voltage	6,4 kV, U_{e^-}, 50 Hz, 5 sec., primary conductor against measuring output / housing
Auxiliary voltage:	± 12 V DC, ± 15 %, < 70 mA, external protection via microfuse 100 mA / 250 V, fast!
Energia response time (90 % I_{PN}, di/dt = 100 A / µs)	˝ 1 µs (t yp. 150 ns)
Signal rise speed di/dt	< 100 A / µs
Isolation class	E
Protection class	IP 20
Operating altitude	˝ 2000 m (DIN EN 61010-1)
Max. temperature of the primary conductor	100° C
Operating temperature	-25° C < T_U < +60° C, 0…95% rH, without condensation
Storage temperature	-40° C < T_L < +90° C

Dimensions

Bus bar 1	40 x 10 mm
Bus bar 2	30 x 15 mm
Round conductor	31,5 mm
Transformer width	90 mm
Transformer height	115 mm
Transformer depth	58,5 mm

Applicable technical standards

DIN EN 50178, 1997
DIN EN 61010-1, 2002
VDE 0160

Electric connections

U_H + 0 (Ground) I_A
Spring clamp terminal

Connection cross sections	0.08…2.5 mm²

Order list

Primary current [A] DC / AC (I_{e^-})	Art. - no.	Current output
150	1001201-10005	DC: 0... ±20 mA AC: 0...20 mA I_{e^-}
200	1001201-10006	
250	1001201-10007	
300	1001201-10008	
400	1001201-10009	
500	1001201-10010	

CCT 414 U

(Compensation current transformer, All current sensors)

Current transformers for the measurement of direct and alternating currents
- For measuring of non-sinusoidal and distorted networks
- As a measuring transducer for the direct input wiring of SPS input cards

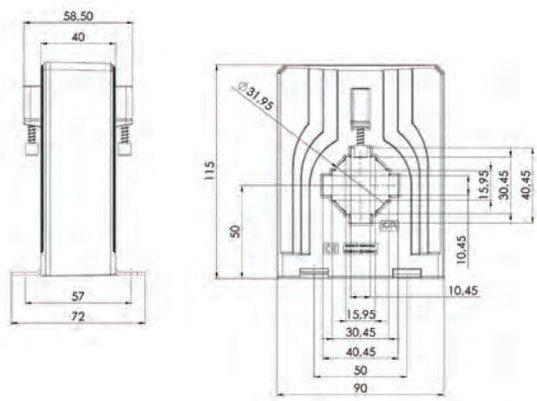

Function

- Electricity is conducted over the magnetic f eld and is captured by the measuring core. The current induced in the measuring core is proportional to the primary current and is captured by a semi-conductor element. An integrated electronic control unit converts the semi-control signal into an output current signal, which is directly proportional to the temporal course of the measured primary value.
- A contactless inductive captured parameter creates a galvanically separated output signal.
- Electrical contact with the secondary circuit of the current transformer is achieved by means of a 4-pole-spring-clamp. This clamp is suitable for connection to a f exible conductor up to 2.5 mm^2.
- A DC auxiliary voltage of ± 12 V is required to supply the electronic controls. The auxiliary voltage input must be secured by a HRC fuse size of 100 mA / 250 V microfuse.

Advantages

- Measuring of direct current as well as alternating current with only one current transformer is possible.
- Large working frequency range from 0 Hz (DC)…100 kHz (AC).
- High electric protection of the galvanically isolated capture of the measured variable.
- Low power-consumption (˜ 2.5 VA)
- Easy and safety electrical connection by means of spring clamp terminal.
- Direct mounting onto the bus bar by means of integrated f xing screws which are part of the unit.
- Mounting onto 35 mm DIN-rail by means of optional supply of snap-on mounting.
- High climatic and mechanical durability, PU-resin hardened enclosures of all electrical components.

Connection

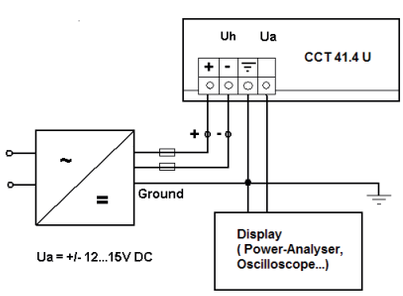

Transfer ratio

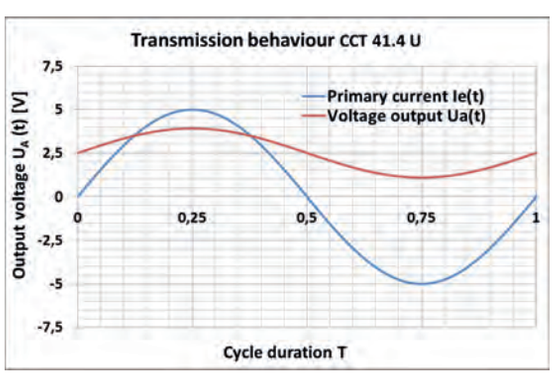

Additional accessories

Snap-on mounting to clip onto
35 mm DIN rail (Art.-no. 10053011))

Technical data

Measuring range	0…500 A DC / AC I_{e^-}, depends on varieties! (Nominal current ranges adjusted to standard values according to IEC)
Frequency range	0...100 kHz, any signal curves
Voltage output at AC-input signal	2,5 ± 1 V, U_{e^-}, AC; 2,5 ± 1,414 V (Peak-Peak)
Voltage output at DC-input signal	2,5 ± 1 V, DC
Max. burden resistance at current output	R_B ˝ 100 ˙
Current limit under overload	< 5 V
Accuracy	± 0,5 %
Max. operating voltage U_m	0,72 kV, U_{e^-}
Isolation test voltage	6,4 kV, U_{e^-}, 50 Hz, 5 sec., primary conductor against measuring output / housing
Auxiliary voltage:	± 12 V DC, ± 15 %, < 70 mA, external protection via microfuse 100 mA / 250 V, fast!
Energia response time (90 % I_{PN}, di/dt = 100 A / µs)	˝ 1 µs (t yp. 150 ms)
Signal rise speed di/dt	< 100 A / µs
Isolation class	E
Protection class	IP 20
Operating altitude	˝ 2000 m (DIN EN 61010-1)
Max. temperature of the primary conductor	100° C
Operating temperature	-25° C < T_U < +60° C, 0…95% rH, without condensation
Storage temperature	-40° C < T_L < +90° C

Dimensions

Bus bar 1	40 x 10 mm
Bus bar 2	30 x 15 mm
Round conductor	31,5 mm
Transformer width	90 mm
Transformer height	115 mm
Transformer depth	58,5 mm

Applicable technical standards

DIN EN 50178, 1997
DIN EN 61010-1, 2002
VDE 0160

Electric connections

U_H + 0 (Ground) I_A
Spring clamp terminal

Connection cross sections: 0.08…2.5 mm²

Order list

Primary current [A] DC / AC (I_{e^-})	Art. - no.	Current output
150	1001202-10005	DC: 2.5 ± 1 V AC: 2,5 ± 1,414 V (Peak-Peak)
200	1001202-10006	
250	1001202-10007	
300	1001202-10008	
400	1001202-10009	
500	1001202-10010	

SWMU 31.5

Measuring transducer for alternating current

with or without auxiliary voltage supply
with integrated current transformer
housing unit for 35 mm DIN rail

- measuring input: Sinus-shaped AC current (1 A … 750 A)
- arithmetical mean value measurement, e˜ ective value calibrated
- measuring output: Unipolar output signal
- measuring principle: Rectif er process
- with integrated current transformer
- minimal wiring

Application

Measuring transducers for the transformation of sinus-shaped AC current. For an output signal a load-independent DC current / and an imprinted DC voltage signal is available, which stands proportionally to the measurement value of the input volume.
These signals can be used for display, recording, monitoring and/or control function.
The measuring transducer fulf lls the requirements and regulations with regard to the electromagnetic compatibility (EMC) and security (IEC 1010 and EN 61010). This measuring transducer has been designed, produced, and tested in accordance with ISO 9001.

Technical data SWMU 31.51/52 SWMU 32.51/52

Measuring input	
nominal frequency	f_N 50/60 Hz
rated input current I_N SWMU 31.52 SWMU 31.51	 1...10 A 15...750 A
consumption	˜ 1 VA (2.5 VA with out auxiliary voltage)
overload capacity	1.5 · I_N, constant 8 · I_N, 40 sec.
Measuring output	
load-independent DC current	0…20 mA or 4…20 mA*
max. burden resistance	˜ 500 ˙
max. burden voltage	˜ 15V
current limit under overload	˜ 34 mA
imprinted DC voltage	0…10 V or 2…10 V*
burden resistance	ˆ 10 k˙
max. burden voltage under overload	˜ 18 V
voltage limit	˜ 18 V
residual ripple of the output current	˜ 1% p .p.
response time	˜ 500 ms
operating temperature range	-5° C ˜ ˇ ˜ +40° C

Auxiliary power	
AC power supply	230 V ± 10% (50…60 Hz)
DC	24 V ± 15%
power input	˜ 1.5 W (2.5 VA)
Accuracy	
reference value	output end value
accuracy class	class 0.5
warming-up time	˜ 5 min.
Protection	
electrocution protection	IP 40, housing (test wire, EN 60529) IP 20, connection terminals (test digit, EN 60529)
contamination class	2
test voltages (DIN 57411)	4 kV, active circuits against housing 4 kV, auxiliary voltage against measuring output (230 V AC-version) 500 V, auxiliary voltage against measuring output (24 V DC-version)

* Live-Zero only with auxiliary voltage

Please note: Mounting base for direkt f tting without use of 35mm DIN rail included in the deliveries

Auxilliary voltage 230 V AC

Type SWMU	Primary current ˇA]	Measuring output			
		0...20mA and 0...10V	4...20mA and 0...10V	0...20mA and 2...10V	4...20mA and 2...10V
31.52	1	10031-1006	10031-2006	10031-3006	10031-4006
	5	10031-1007	10031-2007	10031-3007	10031-4007
	10	10031-1008	10031-2008	10031-3008	10031-4008
31.51	15	10031-1009	10031-2009	10031-3009	10031-4009
	20	10031-1010	10031-2010	10031-3010	10031-4010
	25	10031-1011	10031-2011	10031-3011	10031-4011
	30	10031-1012	10031-2012	10031-3012	10031-4012
	40	10031-1013	10031-2013	10031-3013	10031-4013
	50	10031-1014	10031-2014	10031-3014	10031-4014
	60	10031-1015	10031-2015	10031-3015	10031-4015
	75	10031-1016	10031-2016	10031-3016	10031-4016
	100	10031-1017	10031-2017	10031-3017	10031-4017
	150	10031-1018	10031-2018	10031-3018	10031-4018
	200	10031-1019	10031-2019	10031-3019	10031-4019
	250	10031-1020	10031-2020	10031-3020	10031-4020
	300	10031-1021	10031-2021	10031-3021	10031-4021
	400	10031-1022	10031-2022	10031-3022	10031-4022
	500	10031-1023	10031-2023	10031-3023	10031-4023
	600	10031-1024	10031-2024	10031-3024	10031-4024
	750	10031-1025	10031-2025	10031-3025	10031-4025
measuring frequency 50/60 Hz - weight 350 g					

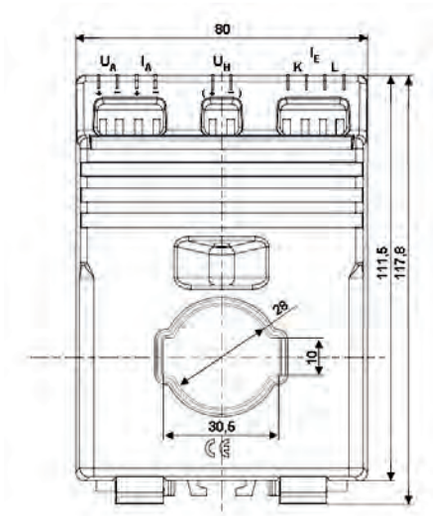

Depth: 50 (72) mm

Auxilliary voltage 24 V AC

Type SWMU	Primary current ˇA]	Measuring output			
		0...20mA and 0...10V	4...20mA and 0...10V	0...20mA and 2...10V	4...20mA and 2...10V
31.52	1	10031-5006	10031-6006	10031-8006	10031-8006
	5	10031-5007	10031-6007	10031-8007	10031-8007
	10	10031-5008	10031-6008	10031-8008	10031-8008
31.51	15	10031-5009	10031-6009	10031-8009	10031-8009
	20	10031-5010	10031-6010	10031-8010	10031-8010
	25	10031-5011	10031-6011	10031-8011	10031-8011
	30	10031-5012	10031-6012	10031-8012	10031-8012
	40	10031-5013	10031-6013	10031-8013	10031-8013
	50	10031-5014	10031-6014	10031-8014	10031-8014
	60	10031-5015	10031-6015	10031-8015	10031-8015
	75	10031-5016	10031-6016	10031-8016	10031-8016
	100	10031-5017	10031-6017	10031-8017	10031-8017
	150	10031-5018	10031-6018	10031-8018	10031-8018
	600	10031-5019	10031-6019	10031-8019	10031-8019
	250	10031-5020	10031-6020	10031-8020	10031-8020
	700	10031-5021	10031-6021	10031-8021	10031-8021
	700	10031-5022	10031-6022	10031-8022	10031-8022
	500	10031-5023	10031-6023	10031-8023	10031-8023
	600	10031-5024	10031-6024	10031-8024	10031-8024
	750	10031-5025	10031-6025	10031-8025	10031-8025
measuring frequency 50/60 Hz - weight 250 g					

Without auxilliary voltage supply

Type SWMU	Primary current ˇA]	Measuring output
		0...20mA and 0...10V
32.52	1	10031-9006
	5	10031-9007
	10	10031-9008
32.51	40	10031-9013
	50	10031-9014
	60	10031-9015
	75	10031-9016
	100	10031-9017
	150	10031-9018
	200	10031-9019
	250	10031-9020
	300	10031-9021
	400	10031-9022
	500	10031-9023
	600	10031-9024
	750	10031-9025
power requirements P_E ˇ 2,5 VA ! measuring frequency 50/60 Hz - weight 600 g operating range 15 ... 120 % I_N		

SWMU 41.5

Measuring transducer for alternating current

with or without auxiliary voltage supply
with integrated current transformer
housing unit for 35 mm DIN rail

- measuring input: Sinus-shaped AC current (1 A … 800 A)
- arithmetical mean value measurement, e˜ ective value calibrated
- measuring output: Unipolar output signal
- measuring principle: Rectif er process
- with integrated current transformer
- minimal wiring

Application

Measuring transducers for the transformation of sinus-shaped AC current. For an output signal a load-independent DC current / and an imprinted DC voltage signal is available, which stands proportionally to the measurement value of the input volume.
These signals can be used for display, recording, monitoring and/or control function.
The measuring transducer fulf lls the requirements and regulations with regard to the electromagnetic compatibility (EMC) and security (IEC 1010 and EN 61010). This measuring transducer has been designed, produced, and tested in accordance with ISO 9001.

Technical data SWMU 41.51/52 SWMU 42.51/52

Measuring input	
nominal frequency	f_N 50/60 Hz
rated input current I_N SWMU 41.52 SWMU 41.51	 1...10 A 15...800 A
consumption	˝ 1 VA (2.5 VA with out auxiliary voltage)
overload capacity	1.5 · I_N, constant 8 · I_N, 40 sec.
Measuring output	
load-independent DC current	0…20 mA or 4…20 mA*
max. burden resistance	˝ 500 ˙
max. burden voltage	˝ 15V
current limit under overload	˝ 34 mA
imprinted DC voltage	0…10 V or 2…10 V*
burden resistance	ˆ 10 k˙
max. burden voltage under overload	˝ 18 V
voltage limit	˝ 18 V
residual ripple of the output current	˝ 1% p .p.
response time	˝ 500 ms
operating temperature range	-5° C ˝ ˇ ˝ +40° C

Auxiliary power	
AC power supply	230 V ± 10% (50…60 Hz)
DC	24 V ± 15%
power input	˝ 1.5 W (2.5 VA)
Accuracy	
reference value	output end value
accuracy class	class 0.5
warming-up time	˝ 5 min.
Protection	
electrocution protection	IP 40, housing (test wire, EN 60529) IP 20, connection terminals (test digit, EN 60529)
contamination class	2
test voltages (DIN 57411)	4 kV, active circuits against housing 4 kV, auxiliary voltage against measuring output (230 V AC-version) 500 V, auxiliary voltage against measuring output (24 V DC-version)

* Live-Zero only with auxiliary voltage

Please note: Mounting base for direkt f tting without use of 35mm DIN rail included in the deliveries

Auxilliary voltage 230 V AC

Type SWMU	Primary current ˇA]	Measuring output			
		0...20mA and 0...10V	4...20mA and 0...10V	0...20mA and 2...10V	4...20mA and 2...10V
41.52	1	10061006	10062006	10063006	10064006
	5	10061007	10062007	10063007	10064007
	10	10061008	10062008	10063008	10064008
41.51	15	10061009	10062009	10063009	10064009
	20	10061010	10062010	10063010	10064010
	25	10061011	10062011	10063011	10064011
	30	10061012	10062012	10063012	10064012
	40	10061013	10062013	10063013	10064013
	50	10061014	10062014	10063014	10064014
	60	10061015	10062015	10063015	10064015
	75	10061016	10062016	10063016	10064016
	100	10061017	10062017	10063017	10064017
	150	10061018	10062018	10063018	10064018
	200	10061019	10062019	10063019	10064019
	250	10061020	10062020	10063020	10064020
	300	10061021	10062021	10063021	10064021
	400	10061022	10062022	10063022	10064022
	500	10061023	10062023	10063023	10064023
	600	10061024	10062024	10063024	10064024
	750	10061025	10062025	10063025	10064025
	8000	10061026	10062026	10063026	10064026
measuring frequency 50/60 Hz - weight 350 g					

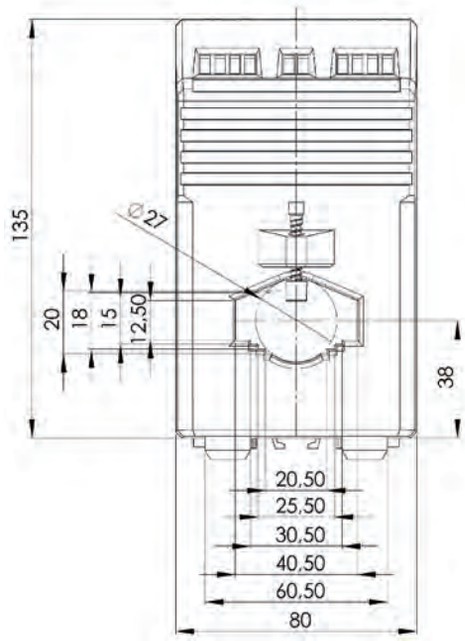

Depth: 50 (72) mm

Auxilliary voltage 24 V AC

Type SWMU	Primary current ˇA]	Measuring output			
		0...20mA and 0...10V	4...20mA and 0...10V	0...20mA and 2...10V	4...20mA and 2...10V
41.52	1	10065006	10066006	10068006	10068006
	5	10065007	10066007	10068007	10068007
	10	10065008	10066008	10068008	10068008
41.51	15	10065009	10066009	10068009	10068009
	20	10065010	10066010	10068010	10068010
	25	10065011	10066011	10068011	10068011
	30	10065012	10066012	10068012	10068012
	40	10065013	10066013	10068013	10068013
	50	10065014	10066014	10068014	10068014
	60	10065015	10066015	10068015	10068015
	75	10065016	10066016	10068016	10068016
	100	10065017	10066017	10068017	10068017
	150	10065018	10066018	10068018	10068018
	600	10065019	10066019	10068019	10068019
	250	10065020	10066020	10068020	10068020
	700	10065021	10066021	10068021	10068021
	700	10065022	10066022	10068022	10068022
	500	10065023	10066023	10068023	10068023
	600	10065024	10066024	10068024	10068024
	750	10065025	10066025	10068025	10068025
	800	10065026	10066026	10068026	10068026
measuring frequency 50/60 Hz - weight 250 g					

Without auxilliary voltage supply

Type SWMU	Primary current ˇA]	Measuring output
		0...20mA and 0...10V
42.52	1	10069006
	5	10069007
	10	10069008
42.51	40	10069013
	50	10069014
	60	10069015
	75	10069016
	100	10069017
	150	10069018
	200	10069019
	250	10069020
	300	10069021
	400	10069022
	500	10069023
	600	10069024
	750	10069025
	800	10069026
power requirements P_E ˆ 2,5 VA ! measuring frequency 50/60 Hz - weight 600 g operating range 15 ... 120 % I_N		

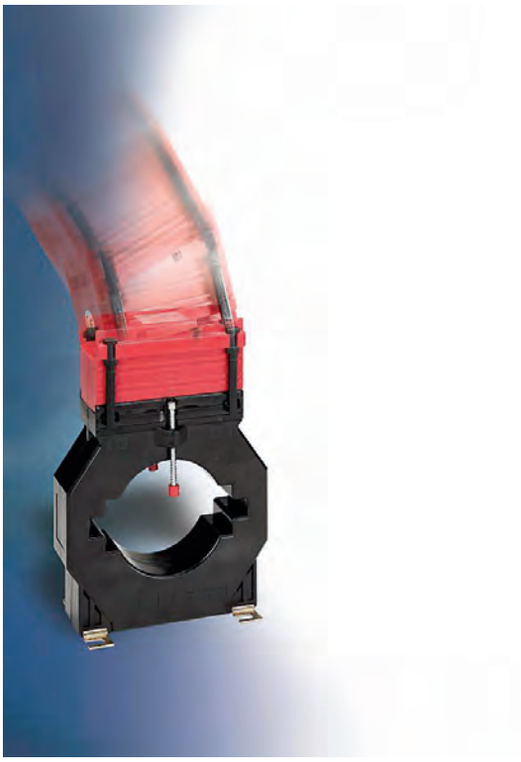

NMC

Measuring transducer for AC current

Clip-on measuring transducer in modular construction.
Versions with (NMC 2/3/4) or without auxiliary voltage supply (NMC 0).

- measuring input: Sinus-shaped AC current (1 A or 5 A)
- arithmetical mean value measurement, e˜ ective value calibrated
- measuring output: Unipolar output signal
- measuring principle: Rectif er process
- Direct notching through contact studs
- Economic wiring

Measuring transducers for the transformation of sinus-shaped AC current. For an output signal a load-independent DC current and in imprinted DC voltage signal is available, which stands proportionally to the measurement value of the input volume.
These signals can be used for display, recording, monitoring and or control function. Simultaneously, the secondary current of the current transformer can be utilized to operate conventional needle instruments.
The measuring transducer fulf lls the requirements and regulations with regard to the electromagnetic compatibility (EMC) and security (IEC 1010 and EN 61010). This measuring transducer has been designed, produced and tested in accordance with ISO 9001.

Technical data

Measuring input	
nominal frequency	f_N 50/60 Hz
rated input current I_N	1 A or 5 A
power input from measuring circuit	˝ 1 VA (2.5 VA with out auxiliary voltage)
overload capacity	1.2 · I_N, constant 8 · I_N, 40 sec.
Measuring output	
load-independent DC current	0 (4) … 20 mA
max. burden resistance	˝ 500 ˙
max. burden voltage	˝ 15V
current limit under overload	˝ 34 mA
residual ripple of the output current	˝ 1% p .p.
imprinted C voltage	0 (2) ... 10 V
max. burden resistage	ˆ 10 k ˙
max. burden voltage under overload	˝ 18 V
response time	< 500 ms

Auxiliary power	
AC power supply	230 V ± 10% (50…60 Hz) 110 V ± 10% (50…60 Hz)
DC	24 V ± 15%
power input	˝ 1.5 W (2.5 VA)
Accuracy	
reference value	output end value
accuracy range	1 … 120 % I_N (NMC 2/3/4) 15 … 120 % I_N (NMC 0)
warming-up time	˝ 5 min.
Protection	
electrocution protection	IP 40, housing (test wire, EN 60529) IP 20, connection terminals (test digit, EN 60529)
contamination class	2
test voltages (DIN 57411)	4 kV, active circuits against housing 4 kV, auxiliary voltage against measuring output (230 V AC-version) 500 V, auxiliary voltage against measuring output (24 V DC-version)

NMC measuring transducer for sinus-shaped alternating currents, for clip-on current transformer (rectif er-mean value measurement)

Auxiliary voltage 24 V DC, galvanically separated

Type NMC (2)	measuring outputs			primary current [A]	suitable for CTs in the product range
	0...20 mA and 0...10 V	4...20 mA and 0...10 V	4...20 mA and 2...10 V		
211	10039212	10039232	10039252	1	A
212	10039213	10039233	10039253	1	B
213	10039214	10039234	10038254	1	C
214	10039215	10039235	10039255	1	D
221	10039012	10039032	10039052	5	A
222	10039013	10039033	10039053	5	B
223	10039014	10039034	10039054	5	C
224	10039015	10039035	10039055	5	D
nominal frequency 50/60 Hz - weight 80g - operating range 0 ... 120 % I_N					

Auxiliary voltage 230 V DC, galvanically separated

Type NMC (3)	measuring outputs			primary current [A]	suitable for CTs in the product range
	0...20 mA and 0...10 V	4...20 mA and 0...10 V	4...20 mA and 2...10 V		
311	10036212	10036232	10036252	1	A
312	10036213	10036233	10036253	1	B
313	10036214	10036234	10038254	1	C
314	10036215	10036235	10036255	1	D
321	10036012	10036032	10036052	5	A
322	10036013	10036033	10036053	5	B
323	10036014	10036034	10036054	5	C
324	10036015	10036035	10036055	5	D
nominal frequency 50/60 Hz - weight 80g - operating range 0 ... 120 % I_N					

Auxiliary voltage 110 V AC, galvanically separated

Type NMC (4)	measuring outputs			primary current [A]	suitable for CTs in the product range
	0...20 mA and 0...10 V	4...20 mA and 0...10 V	4...20 mA and 2...10 V		
411	10076212	10076232	10076252	1	A
412	10076213	10076233	10076253	1	B
413	10076214	10076234	10076254	1	C
414	10076215	10076235	10076255	1	D
421	10076012	10076032	10076052	5	A
422	10076013	10076033	10076053	5	B
423	10076014	10076034	10076054	5	C
424	10076015	10076035	10076055	5	D
nominal frequency 50/60 Hz - weight 80g - operating range 0 ... 120 % I_N					

Without auxiliary voltage supply, power requirement ° 2.5 VA

Type NMC (0)	measuring outputs	primary current [A]	suitable for CTs in the product range
	0...20 mA and 0...10 V		
011	10037212	1	A
012	10037213	1	B
013	10037214	1	C
014	10037215	1	D
021	10037012	5	A
022	10037013	5	B
023	10037014	5	C
024	10037015	5	D
nominal frequency 50/60 Hz - weight 80g - operating range 15 ... 120 % I_N			

Construction type "A"

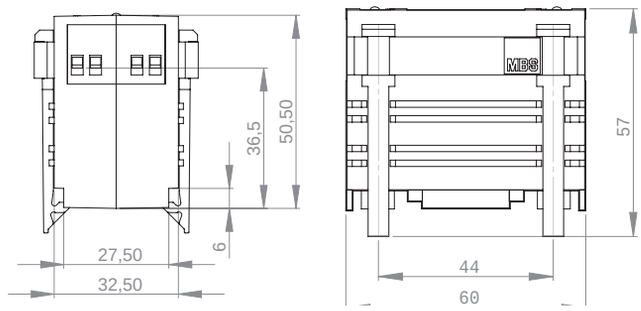

Construction type "B" / "C"

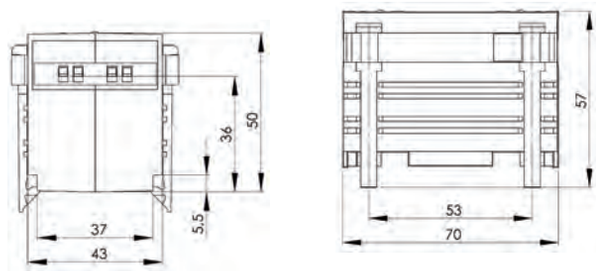

Construction type "D"

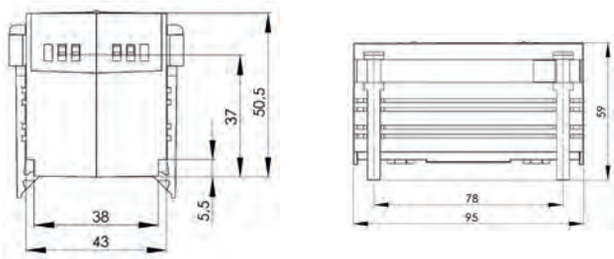

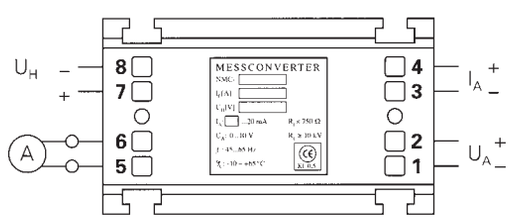

Comment

The dimensions of the measuring transducer are relevant only for the adaption to the existing current transformer construction types. All units consist of the same electronic modules.

NMC selection chart

Primary current [A]	Construction type														
	A						B	C			D				
1						WSK 30	WSK 40								
5															
10															
15															
20															
25															
30															
40															
50															
60															
75															
80															
100															
125															
150															
200															
250															
300															
400															
500															
600															
750															
800															
1000															
1200															
1250															
1500															
1600															
2000															
2500															
3000															

ASK 41.3 (sec. 1 A up to 300 A)
ASK 318.3
ASK 31.3
ASR 22.3
ASK 21.3
ASK 41.4
ASK 412.4
ASK 421.4
ASK 61.4
ASK 63.4
ASK 81.4
ASK 101.4
ASK 105.6

NMC-AD

Adaptor for current transformers of any make to clip onto 35 mm DIN rail

- Accomodation of any make of current transformers in connection with transducers of type NMC
- Direct mounting of measuring transducer, in visual devision to the measuring point, onto a standard 35 mm DIN rail

Art.-no.	Application with NMC art.-no.
10036011	10039xx2; 10036xx1/2; 10037xx2; 10076xx2

Connection	Description
6, 7	Incoming terminals 5 A or 1 A (sourced from current transformer)

Short circuit adapter NMC-KSx

Adaptors of type NMC-KSx are clipped onto current transformers. When the secondary circuit of a current transformer is not being energized the adaptors prevent idling of the transformer, and thus the occurrence of high neutral voltages in the nominal currentof the current transformer.

Type NMC-KSx	Art.-no.	Applicable current transformer types													drawing
		WSK 30	WSK 40	ASR 22.3	ASK 21.3	ASK 31.3	ASK 41.3	ASK 41.4	ASK 421.4	ASK 61.4	ASK 63.4	ASK 81.4	ASK 101.4	ASK 105.6	
0	10039090	✓		✓	✓	✓	✓								A
1	10039091		✓												B / C
2	10039092							✓	✓						B / C
3	10039093									✓	✓	✓	✓	✓	D

Split-core current transformer, type KBR

with voltage output 0…333 mV or
with DC current output 4…20 mA DC

- Perfect for subsequent assembly into already existing installations
- Due to the „click"-system even a one-hand mounting is possible
- Deliverable as a current sensor (0…333 mV) or measuring ransducer (4…20 mA DC) or with AC secondary current 5 A / 1 A.
- Auxiliary power supply via output circuit (2-wire connection)
- Three di˜ erent construction types

Available measuring ranges

KBR 18 (Inner diameter: 18.5 mm)
- Primary current: 50 – 250 A
- Voltage output: 0…333 mV
- Accuracy class 1

KBR 32 (Inner diameter: 32.5 mm)
- Primary current: 100 – 600 A
- Current or voltage output: 4…20 mA DC or 0…333 mV
- Accuracy class 1

KBR 44 (Inner diameter: 44 mm)
- Primary current: 250 – 1000 A
- Current or voltage output: 4…20 mA DC or 0…333 mV
- Accuracy class 1

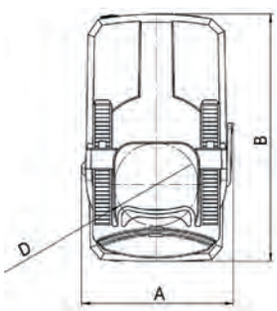

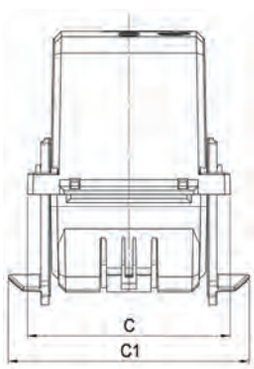

General technical specif cations

- Length of connection cable: 0…333 mV: 2.5 m, cross section 2x0.75 mm²
  4…20 mA: 2.5 m, cross section 2x0.75 mm²
  (Other lengths are possible on request)
- Operating temperature: -5°C < T < +50°C
- Storage temperature: -25°C < T < +70°C
- Therm. nominal continuous rated current I_{cth}: 1.2 x I_N
- Therm. nominal short-time current I_{th}: 60 x I_N, 1 sec.
- Max. operating voltage U_m: 0.72 kV
- Isolation test voltage: 3 kV, U_{e^-}, 50 Hz, 1 min.
- Rated frequency: 50 Hz
- Isolation class: E
- Applicable technical standard: DIN EN 61869, part 1 + 2

Type	A (width) [mm]	B (height) [mm]	C / C1 (depth) [mm]	D (diameter) [mm]
KBR18	41,6	64,5	55 / 67,3	18,5
KBR32	59,2	96,4	75 / 89,2	32,5
KBR44	72,2	120,6	85 / 98,1	44

Wiring diagram of the KBR 32 + 44
with DC output current 4...20 mA

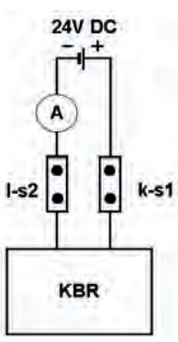

Technical characteristics for the KBR with output signal 4…20 mA

- 2-wire connection, auxiliary power via output circuit
- Auxiliary power: 24 V DC ± 15 %, PV = max. 1 VA
- Load-independent DC current: Live-zero, 4…20 mA
- External resistance: max. 300 ˙
- Current limit under overload: < 30 mA
- Residual ripple of the output current: ˝ 1 % p .p.
- Response time: < 300 ms

EMBSIN

Measuring transducers for electrical variables

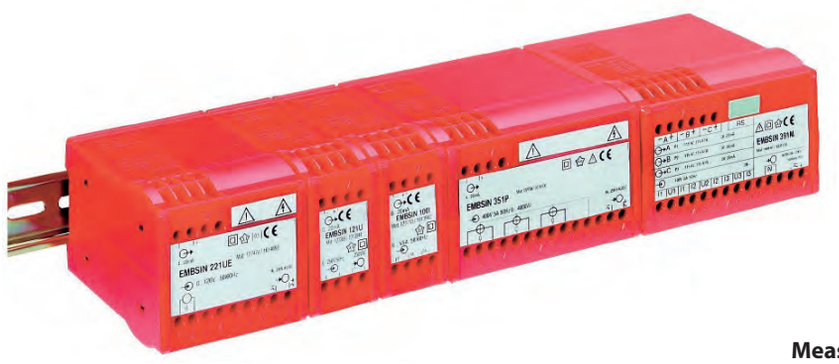

Measuring transducers of the type EMBSIN transforms an input alternating voltage and/or an input alternating current, received as a standard signal from a current transformer,– voltage transformer, or from the power system, into a load imprinted output voltage.

- The various EMBSIN units are arranged to collate all measuring variables, which are necessary to monitor and to control, the power supply and onsumption, to display the output signals, or to accept these into other units of the measuring- and control technic.
- Several units such as indicators, recorders or signal processing systems can be connected to the output. The transducer's conf guration assures a safe division for all functions for a galvanic separation between inputs and outputs. The most important applications for the transducers are in the generation and distribution of energy, in the manufacturing industry, and panel building enterprises.
- The transducers have been developed upon an intirely new housing technology concept and are available in 5 di˜ erent sizes.
- The housing material made of high quality polycarbonate are **free of silicon as well as halogen** and, are f ame resistant. High quality screw terminals are provided for the safe connections of inputs and outputs. Fitment onto the base wall is made with a 35 mm DIN rail. All electrical connections are made at the top of the units for safe and easy access.
- The transducers bear the CE symbol. This symbol provides the highest level of protection for humans, the machine, as well as the environment, and of course, comply with all applicable safety regulations.
- High current measuring transducers, made of the f nest quality enjoy a long tradition and a distinguished worldwide reputation.
- The encapsuled housing design, the carefully chosen material and the construction principles, contribute that the measuring transducers are protected against climatic conditions (temperature and humidity), atmospheric conditions (chemical processes, dust and salt), vibration and shocks, interruptions (electrical or mechanical), HF interferences (communications) as well as permanent or transient interference voltages on all electrical connections.

Compact - Safety - Easy to use - Accurate - Better

Safety
EN 61010 also on the terminals!
690 V max. input voltage
Hosing material: Polycarbonate
Fire resistance class: V-0 acc. to UL94
(self-extinguishing, halogen- free, silicon-free)

Easy to use
Units with two wide-end auxiliary power ranges
24…65 V AC/DC or 85…230 V AC/DC
Auxiliary power, to be connected either on the top or on the bottom
cos φ or linear recalibrating can be synchronized without opening the unit and without AC calibrators!
Mounting onto 35mm DIN rail
Operating instructions are included

Compact

Height	60 mm
Depth	112 mm
Width	105 mm for power, 70 mm for frequency and phase as well as U and I with wide-range auxiliary power
	35 mm with two-wire feed 24 V DC or 230 V AC
	35 mm for current and voltage without auxiliary power supply

Accuracy

All units	class 0.5
EMBSIN 241 F	class 0.2
EMBSIN 241 FD	class 0.2

Better
Highest quality and safety at very competitive prices!

Assembly

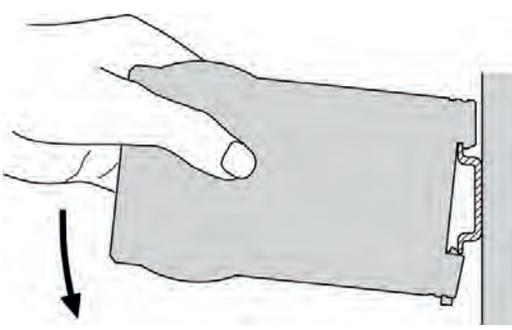

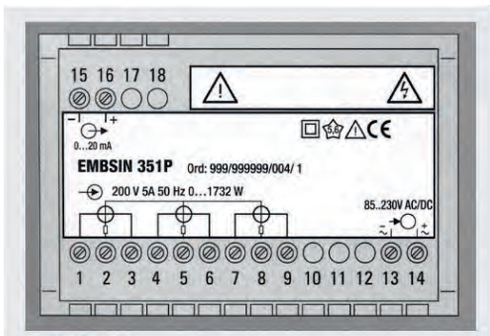

Easy to use

Dismantling

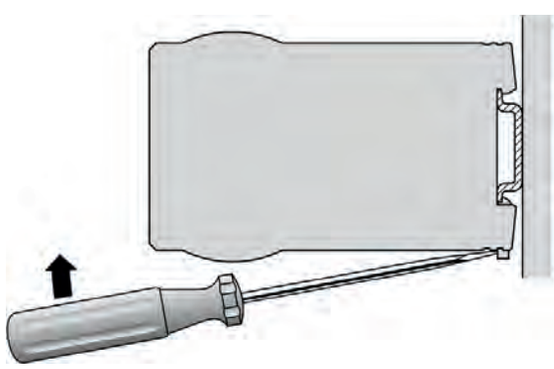

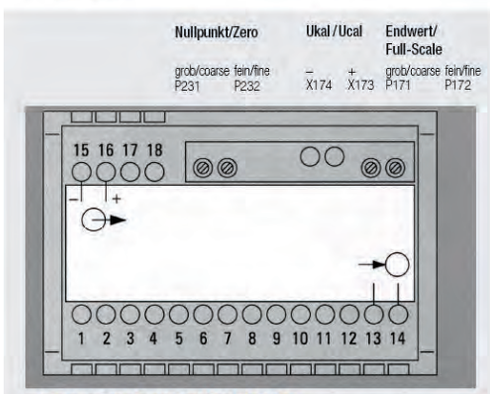

Intermediate circuit calibration

EMBSIN 100 I

Measuring transducer for AC current

- Without auxiliary voltage supply
- With two measuring ranges (selectable at terminals)
- Housing unit for 35 mm DIN rail mounting
- Measuring input: sinus-shaped alternating current (0...1/5 A or 0...1,2/6 A, selectable at terminals), arithmetical mean value measurement, e˜ ective value calibration
- Measuring output: unipolar output signal
- Measuring principle: rectif er mean value measurement process
- Economic wiring

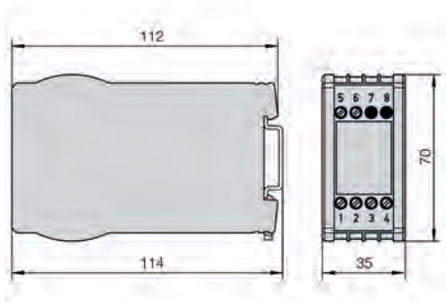

Application

Measuring transducer for the transformation of sinus-shaped alternating current. A load-independent DC signal which is proportional to the measurement value serves as an output signal, and allows for display, recording, monitoring and/or control functions. This measuring transducer fulf lls the requirements and regulations with regard to the electromagnetic compatibility (EMC) and safety (IEC 1010 and EN 61010). These measuring transducers are designed for indoor use only.

Technical data

Measuring input	
rated frequency	f_N 50/60 Hz
rated input current I_N	1 / 5 A or 1.2 / 6 A (selectable at terminal)
consumption	˜ 2.5 VA
overload capacity	1.2 · I_N, constant 20 · I_N, 1 sec.
Measuring output	
load-independent DC current	0…5 mA, 0…10 mA or 0…20 mA
max. burden voltage	˜ 15V
Voltage limit by $R_{EXT} = \infty$	˜ 30V
current limit under overload	˜ 34 mA
residual ripple of the output current	˜ 1 % p .p.
response time	< 500 ms
Accuracy	
reference value	output end value
accuracy class	class 0.5
measuring range	0…100 % I_N

temperature inf uence (-10 ... +55 °C)	0.2 % / 10 K
operating temperature	-10 °C up to +55 °C
storage temperature	-40 °C up to +70 °C
Safety	
protection class	II (protection isolated, DIN EN 61010)
electrocution protection	IP 40, housing (test wire, EN 60529) IP 20, connection terminals (test digit, EN 60529)
contamination class	2
overvoltage category	III
nominal isolation voltage (to earth)	250 V, input 40 V, output
test voltages	50 Hz, 1 min., EN 61010-14 3.7 kV, rms, measuring inout against measuring output and exterior surface 490 V, measuring output against exterior surface
weight	270 g

EMBSIN 101 I

Measuring transducer for AC current

- With auxiliary voltage supply
- Optional with measuring output 4...20 mA and/or 2-wire technic
- Housing unit for 35 mm DIN rail mounting
- Measuring input: sinus-shaped alternating current arithmetical mean value measurement, e˜ ective value calibration
- Measuring output: unipolar and live-zero output signals
- Measuring principle: rectif er mean value measurement process
- AC or DC auxiliary power supply

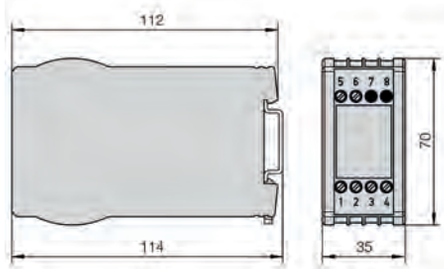

Application

Measuring transducer for the transformation of sinus-shaped alternating current. A load-independent DC signal which is proportional to the measurement value serves as an output signal, and allows for display, recording, monitoring and/or control functions. This measuring transducer fulf lls the requirements and regulations with regard to the electromagnetic compatibility (EMC) and safety (IEC 1010 and EN 61010). These measuring transducers are designed for indoor use only.

Technical data

Measuring input	
rated frequency	f_N 50/60 Hz
rated input current I_N	0...1 A or 0...5 A optionally: 0...1,2 A or 0...6 A
consumption	˜ 5 mV x I_N
overload capacity	2 · I_N, constant
Measuring output	
load-independent DC current	0…2,5 mA to 0…20 mA or live-zero 1...5 mA to 4…20 mA
max. burden voltage	˜ 15V
By2-wire connection	standard range 4...20 mA external resistance R_{EXT} dependant of the auxiliary supply H (12...32 V DC) R_{EXT}[k˙] ˜ (H-12) V/20mA
Imprinted DC voltage	0...5 V to 0...10 V or live-zero 1...5 V to 2...10 V
load capacity	max. 20 mA
voltage limit by $R_{EXT} = \infty$	˜ 40 V
current limit under overload	˜ 30 mA
residual ripple of the outout current	˜ 1 % p.p.
response time	< 300 ms
Accuracy	
reference value	output end value
reference value	output end value
accuracy class	class 0.5

operating temperature	-10 °C up to +55 °C
storage temperature	-40 °C up to +70 °C
Auxiliary power	
AC	24, 110, 115, 120, 230 or 400 V ± 15 %, 50/60 Hz; P_V approx. 3 VA
DC	24 V, -15/ +33 % or 24 V, -50/ +33 % by 2-wire feed and output 4...20 mA; P_V approx. 1.5 W
Safety	
protection class	II (protection isolated,DIN EN 61010)
electrocution protection	IP 40, housing (test wire, EN 60529) IP 20, connection terminals (test digit, EN 60529)
contamination class	2
overvoltage category	III
nominal isolation voltage (to earth)	300 V, input 300 V, auxiliary power AC 50 V, auxiliary power 24 V DC 50 V, output
test voltages	50 Hz, 1 min., EN 61010-1 3.7 kV, rms, measuring inout against all other circuits ans exterior surface as well as AC auxiliary power input against outout ans exterior surface; 490 V, measuring output against exterior surface and DC auxiliary power input against exterior surface
weight	195 g

EMBSIN 201 IE

Measuring transducer for AC current

- Auxiliary voltage supply with intergrated AC/DC universal power supply
- E˜ ective value measuring, logarithmical measurement process
- With two measuring ranges (selectable at terminals): 0...1/5 A or 0...1,2/6 A
- Measuring input: sinus-shaped alternating current or distorted alternating currents
- Measuring output: unipolar and live-zero output signals
- Housing unit for 35 mm DIN rail mounting

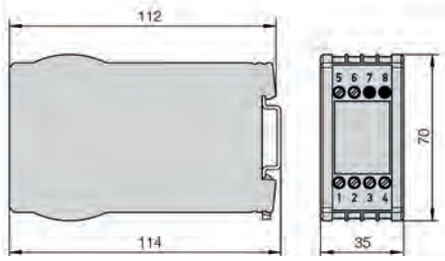

Application

Measuring transducer for the transformation of sinus-shaped or distorted alternating current. A load-independent DC current signal or imprinted DC voltage signal is available,which is proportionally to the rms input volume. This measuring transducer fulf lls the requirements and regulations with regard to the electromagnetic compatibility (EMC) and safety (IEC 1010 and EN 61010). These measuring transducers are designed for indoor use only.

Technical data

Measuring input	
rated frequency	f_N 50/60 Hz
rated input current I_N	1 / 5 A or 1.2 / 6 A (selectable at terminal)
consumption	˝ 1 VA
overload capacity	1.2 · I_N, constant 20 · I_N, 1 sec.
Measuring output	
load-independent DC current	0…1 mA to 0…20 mA or live-zero 0,2...1 mA to 4…20 mA
max. burden voltage	˝15V
external resistance	R_{EXT}[k˙] ˜ 15 V / I_{AN} [mA]
current limit under overload	approx. 1.5 x I_{AN}
Imprinted DC voltage	0...1 V to 0...10 V or live-zero 0,2...1 V to 2...10 V
load capacity	max. 2 mA
external resistance	R_{EXT}[k˙] ˜ U_{AN}[V]/2 mA
voltage limit by $R_{EXT} = \infty$	˜ 25 V
current limit under overload	˜ 10 mA
residual ripple of the outout current	˜ 0.5 % p.p. (300 ms) ˜ 2 % p.p. (50 ms)
response time	50 ms or 300 ms
Accuracy	
referebce value	output and value
accuracy class	class 0.5
peak value factor	√ 2
warming-up time	˜ 5 min
operating temperature	-10 °C up to +55 °C
storage temperature	-40 °C up to +70 °C
Auxiliary power	
universal power supply	DC or AC (40...400 Hz)
AC/DC ranges	24...60 V or 85...230 V
AC power supply	45...65 Hz
power input	˜ 1.5 W (3 VA)
Safety	
protection class	II (protection isolated, DIN EN 61010)
electrocution protection	IP 40, housing (test wire, EN 60529) IP 20, connection terminals (test digit, EN 60529)
contamination class	2
overvoltage category	III
nominal isolation voltage (to earth)	300 V, input 230 V, auxiliary power 40 V, output
test voltages	50 Hz, 1 min., EN 61010-1 3.7 kV, rms, measuring inout against all other circuits ans exterior surface as well as AC auxiliary power input against outout ans exterior surface; 490 V, measuring output against exterior surface and DC auxiliary power input against exterior surface
weight	250 g

EMBSIN 120 U

Measuring transducer for alternating voltage

- Without auxiliary voltage supply
- Housing for 35mm DIN rail mounting
- Measuring input: Sinus-shaped alternating voltage (0…20 V to 0…500 V), arithmetical mean value measurement, e˜ ective value calibration
- Measuring output: unipolar and output signal
- Measuring principle: Rectif er process
- Economic wiring

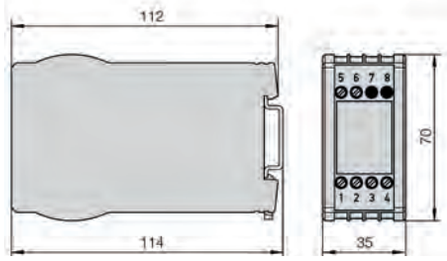

Application

Measuring transducer for the transformation of sinus-shaped alternating voltage. A load-independent DC current signal, which is proportional to the measurement value, serves as an output signal, and allows for display, recording, monitoring and/or control functions. This measuring transducer fulf lls the requirements and regulations with regard to the electromagnetic compatibility (EMC) and safety (IEC 1010 and EN 61010). These measuring transducers are designed for indoor use only.

Technical data

Measuring input	
rated frequency	f_N 50/60 Hz
rated input voltage U_N	0...20 V to 0...500V (linked voltage!) max. input voltage to earth 300V (operating voltage acc. to EN61010)
consumption	˝ 2 VA
overload capacity	1.2 · U_N, constant 2:0 · U_N, 1 sec.
Measuring output	
load-independent DC current	0…5 mA; 0…10 mA or 0…20 mA
max. burden voltage	˝ 15V
max. burden resistance	R_{EXT}[k˙] ˜ 15 V / I_{AN} [mA]
voltage limit by $R_{EXT} = \infty$	˜ 54 V
current limit under overload	˜ 1:70 I_N
residual ripple of the outout current	˜ 1 % p.p
response time	< 300 ms
Accuracy	
referebce value	output and value
accuracy class	class 0.5

reference value	output end value
accuracy class	class 0.5
measuring range	20...100 % U_N
temeperature inf uence (-10... +55 C)	0.2 %/ 10 K
operating temperature	-10 °C up to +55 °C
storage temperature	-40 °C up to +70 °C
Safety	
protection class	II (protection isolated, DIN EN 61010)
electrocution protection	IP 40, housing (test wire, EN 60529) IP 20,connection terminals (test digit, EN 60529)
contamination class	2
nominal isolation voltage	300 V, rms, connection category III 500 V, rms, connection category II
weight	180 g

EMBSIN 121 U

Measuring transducer for alternating voltage

- With auxiliary voltage supply
- Optional with measuring output 4…20 mA and/or 2-wire technic
- Housing for 35mm DIN rail mounting
- Measuring input: Sinus-shaped alternating voltage, arithmetical mean value measurement, e˜ ective value calibration
- Measuring output: Unipolar and live-zero output signals
- Measuring principle: Rectif er process
- AC or DC auxiliary power supply

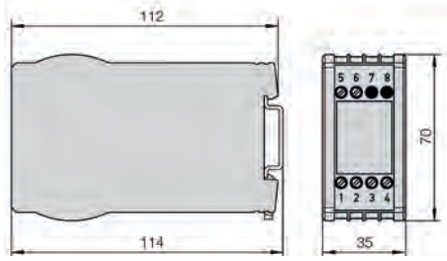

Application

Measuring transducer for the transformation of sinus-shaped alternating voltage. A load-independent DC current signal or imprinted DC voltage signal is available, which stands proportionally to the measurement value of the input volume. This measuring transducer fulf lls the requirements and regulations with regard to the electromagnetic compatibility (EMC) and safety (IEC 1010 and EN 61010).These measuring transducers are designed for indoor use only.

Technical data

Measuring input	
rated frequency	f_N 50/60 Hz
rated input voltage U_N	0...50 V to 0...600V (linked voltage!) max. input voltage to earth 300V (operating voltage acc. to EN61010)
consumption	< U_N 50 µA (U_N ˜ 150 V) < U_N 20 µA (150 < U_N ˜ 400 V) < U_N 5 µA (400 < U_N ˜ 600 V)
overload capacity	1.2 · U_N, constant 2.0 · U_N, 1 sec.
Measuring output	
load-independent DC current	0…5 mA to 0…20 mA or live-zero 1...5 mA to 4…20 mA
max. burden voltage	˝ 15V
max. external resistance	R_{EXT}[k˙] ˜ 15 V / I_{AN} [mA]
by 2-wire connection	standard range 4...20 mA external resistance R_{EXT}, dependedent ot the auxiliary power H (12...32 V DC) R_{EXT}[k˙] ˜ (H-12)V / 20 mA
current limit under overload	< 30 mA
voltage limit by R_{EXT} = ˝	˜ 40 V
residual ripple of the output current	˜ 1 % p.p.
Imprinted DC voltage	0...5 V to 0...10 V or live-zero 1...5 V to 2...10 V
min. burden resistance	R_{EXT}[k˙] ˜ U_{AN} [V] /10 mA
voltage limit by R_{EXT} = ∞	˜ 40 V
current limit under overload	< 30 mA
residual ripple of the outout current	˜ 1 % p.p.
response time	< 300 ms
Accuracy	
reference value	output end value
accuracy class	class 0.5 (U_N ˜ 500 V) class 1 (U_N ˜ 500 V)
operating temperature	-10 °C up to +55 °C
Auxiliary power	
AC	24...400 V (± 15 %; 50/60 Hz) P_V approx. 3 VA
DC	24 V, -15/ +33 % or 24 V, -50/ +33 % by 2-wire feed and output 4...20 mA; P_V approx. 1.5 W
universal power supply (AC + DC)	24...60 V AC/DC DC -15/ +33 % power consumption P_V ˜ 1.5 W AC ± % power consumption P_V ˜ 3 VA
Safety	
protection class	II (protection isolated, DIN EN 61010)
electrocution protection	IP 40, housing (test wire, EN 60529) IP 20,connection terminals (test digit, EN 60529)
contamination class	2
overvoltage category	III
nominal isolation voltage	300 V, input, 300 V, auxiliary power AC 50 V, auxiliary power 24 V DC 50 V, outputl
weight	195 g

EMBSIN 221 UE

Measuring transducer for alternating voltage

- With auxiliary voltage supply by means of an integrated AC/DC universal power supply
- E˜ ective value measuring, logarithmetical process
- Measuring input: Sinus-shaped or distorted alternating voltages
- Measuring range: 0…20 V up to 0…690 V
- Measuring output: Unipolar and live-zero output signals
- Housing for 35mm DIN rail mounting

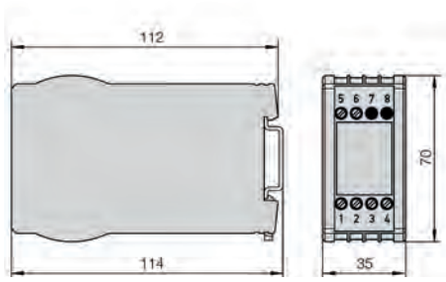

Application

Measuring transducer for the transformation of sinus-shaped or distorted alternating voltages. A load-independent DC current signal or imprinted DC voltage signal is available, which stands proportionally to the rms measurement value of the input volume. This measuring transducer fulf lls the requirements and regulations with regard to the electromagnetic compatibility (EMC) and safety (IEC 1010 and EN 61010). These measuring transducers are designed for indoor use only. These measuring transducers are designed for indoor use only.

Technical data

Measuring input	
rated frequency	f_N 50/60 Hz
rated input voltage U_N	0...20 V to 0...690V max. input voltage to earth 400V
consumption	˝1 VA at U_N
overload capacity	1.2 · U_N, constant 2.0 · U_N, 1 sec.
Measuring output	
load-independent DC current	0…1 mA; 0…20 mA or life zero 0.2 …1 mA to 4...20 mA
max. burden voltage	˝15V
max. burden resistance	R_{EXT}[k˙] ˜ 15 V / I_{AN} [mA]
voltage limit by $R_{EXT} = \infty$	˜ 25 V
current limit under overload	approx. 1.5 x I_{AN}
residual ripple of the outout current	˜ 0.5 % p.p. (300 ms) ˜ 2 % p.p. (50 ms)
imprinted DC voltage	0...1 V to 0...10 V or live-zero 0.2 ... 1 V to 2...10 V
load capacity	max. 2 mA
min. burden resistance	R_{EXT}[k˙] ˜ U_{AN} [V] / 2 mA
voltage limit by $R_{EXT} = \infty$	˜ 25 V
response time	50 ms or 300 ms

Accuracy	
reference value	output end value
accuracy class	class 0.5
warming up time	˜ 5 min
operating temperature	-10 °C up to +55 °C
Accuracy power	
universal power supply	DC or AC (40...400 Hz)
AC/DC ranges	24...60 V or 85...230 V DC -15% / +33 % AC ± 15 <5
power input	˜ 1.5 W (3 VA)
Safety	
protection class	II (protection isolated, DIN EN 61010)
electrocution protection	IP 40, housing (test wire, EN 60529) IP 20,connection terminals (test digit, EN 60529)
contamination class	2
overvoltage category	III
nominal isolation voltage (to erth)	300 V, input 230 V, auxiliary power 40 V, output
weight	250 g

EMBSIN 241 F

Measuring transducer for frequency

- With auxiliary voltage supply by means of an integrated AC/DC universal power supply
- Measuring principle: Digital constant period measuring
- Measuring input: Sinus-shaped, rectangular-shaped or distorted input voltages(10 to 690 V, 10 Hz to 1.5 kHz) with dominant basis wave
- Measuring output: Unipolar, bipolar or live-zero output signals
- Housing for 35mm DIN rail mounting

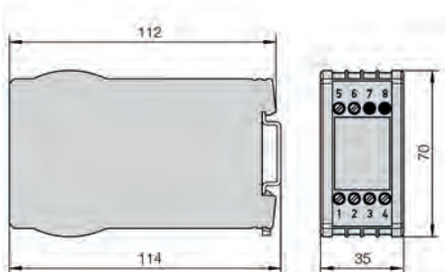

Application

Measuring transducer for frequency. A load-independent DC current signal or an imprinted DC voltage signal is available, which stands proportionally to the frequency of the input volume. This measuring transducer fulf lls the requirements and regulations with regard to the electromagnetic compatibility (EMC) and safety (IEC 1010 and EN 61010). These measuring transducers are designed for indoor use only.

Technical data

Measuring input	
rated frequency	selectable between f_U = 10 Hz and f_O = 1.5 kHz
minimum range	$\Delta f = f_U / (f_O - f_U) < 50$
rated input voltage U_N	10...230 V or 230...690 V (max. 230 V by auxiliary power from voltage measuring input)
consumption	< U_N 1.5mA
overload capacity	1.2 · U_N, constant 2.0 · U_N, 1 sec. (max. 264 V by auxiliary power from voltage measuring input)
wave shape	any, only basic wave will be considered
Measuring output	
nominal values of the response time	4 periods of the basic wave (standard) 2,8,10 periods of the basic wave (optionally)
Load-independent DC current (unipolar)	0...1 mA to 0...20 mA or live-zero 1...5 mA to 4...20 mA
current output bipolar	± 1 mA to ± 20 mA
max. burden voltage	˝+ 15 V resp. ˆ -12 V
current limit under overload	1.3 x I_{AN}
residual ripple of the output current	˜ 0.5 % p.p.
Imprinted DC voltage unipolar (optionally)	0...1 V to 0...10 V or live-zero 0.2 ...1 V to 2...10 V
voltage output bipolar (optionally)	± 1 V to ± 10 V
load capacity	˜ 40 V
voltage limit by $R_{EXT} = \infty$	˜ 25 V
current limit under overload	˜ 30 mA
residual ripple of the outout current	˜ 1 % p.p.
Accuracy	
reference value	output end value
accuracy class	class 0.2
operating temperature	-10 °C up to +55 °C
storage temperature	-40 °C up to +70 °C
Auxiliary power	
universal power supply	DC or AC (40...400 Hz)
AC/DC ranges	24 ...60 V or 85...230 V DC: - 15 % / +33 %, 2W AC: ± 15%, 4 VA
or AC-auxiliary power from voltage measuring input	24...30 V DC and 40...276 V AC (40 Hz ˝f ˝400 H z) ± 15 %
Safety	
protection class	II (protection isolated, DIN EN 61010)
electrocution protection	IP 40, housing (test wire, EN 60529) IP 20,connection terminals (test digit, EN 60529)
contamination class	2
overvoltage category	III
nominal isolation voltage (to earth)	230 V or 400 V input 230 V auxiliary power 40 V output
test voltage	50 Hz, 1 min., EN61010-13.7 kV or 5.55 kV, measuring input against all other circuits and exterior surface 3.7 kV, auxiliary power input against output and exterior surface 490 V, measuring output against exterior surface
weight	300 g

EMBSIN 241 FD

Measuring transducer for frequency di˜ erence

- With auxiliary voltage supply by means of an integrated AC/DC universal power supply
- Measuring principle: Digital constant period measuring
- Measuring input: Sinus-shaped, rectangular-shaped or distorted input voltages with dominant basis wave
- Input voltages 10…690 V (voltage between generator and bus bar)
- Housing for 35mm DIN rail mounting

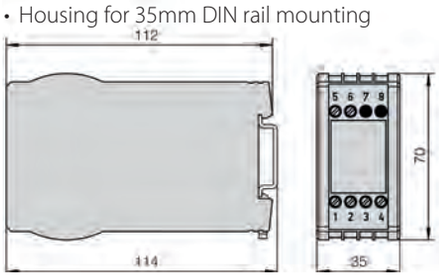

Application

Measuring transducer for monitoring the frequency di˜ erence between two synchronized supplies. A load-independent DC current signal or an imprinted DC voltage signal is available, which stands proportionally to the measuring value. This measuring transducer fulf lls the requirements and regulations with regard to the electromagnetic compatibility (EMC) and safety (IEC 1010 and EN 61010). These measuring transducers are designed for indoor use only. These measuring transducers are designed for indoor use only.

Technical data

Measuring input	
measuring range	$\Delta f = \pm (0.01...0.8) \times f_S$ 10 Hz ˜ f_S, f_G ˜ 1.5 kHz f_S : bus bar frequency f_G : generator frequency
rated input voltage U_N	10...230 V or 230...690 V (voltage between bus bar and generator!) (max. 230 V by auxiliary power from voltage measuring input)
wave shape	any, only basic wave will be considered
Measuring output	
Load-independent DC current (unipolar)	0...1 mA to 0...20 mA or live-zero 1...5 mA to 4...20 mA
current output bipolar	± 1 mA to ± 20 mA
max. burden voltage	˜ + 15 V resp. ˆ -12 V
current limit under overload	˜ 1.3 x I_{AN}
voltage limit by $R_{EXT} = \infty$	˜ 25 V
residual ripple of the output current	˜ 0.5 % p.p.
Imprinted DC voltage unipolar (optionally)	0...1 V to 0...10 V or live-zero 0.2 ...1 V to 2...10 V
voltage output bipolar	± 1 V to ± 10 V
load capacity	˜ 4 mA
voltage limit by $R_{EXT} = \infty$	˜ 25 V
current limit under overload	˜ 30 mA

Accuracy	
reference value	output end value
accuracy class	class 0.2
nominal values of the response time	4 periods of the measuring frequency optionally 2, 8 or 16 periods of the measuring frequency
operating temperature	-10 °C up to +55 °C
storage temperature	-40 °C up to +70 °C
Auxiliary power	
universal power supply	DC or AC (40...400 Hz)
AC/DC ranges	24 ...60 V or 85...230 V DC: - 15 % / +33 %, 2W AC: ± 15%
or AC-auxiliary power from voltage measuring input	24...60 V DC and 85...230 V AC (40 Hz ˜ f ˜ 400 H z) ± 15 %
power input	approx. 2 W (4 VA)
Safety	
protection class	II (protection isolated, DIN EN 61010)
electrocution protection	IP 40, housing (test wire, EN 60529) IP 20,connection terminals (test digit, EN 60529)
contamination class	2
overvoltage category	III
nominal isolation voltage (to earth)	230 V or 400 V input 230 V auxiliary power 40 V output
test voltage	50 Hz, 1 min., EN61010-1 3.7 kV or 5.55 kV, measuring input against all other circuits and exterior surface 3.7 kV, auxiliary power input against output and exterior surface 490 V, measuring output against exterior surface
weight	270 g

EMBSIN 271 G

Measuring transducer for phase angle

- With auxiliary voltage supply by means of an integrated AC/DC universal power supply
- Measuring principle: Monitoring of the distance of zero currents
- Measuring input: Sinus-shaped, rectangular-shaped or distorted input voltages with dominant basis wave
- Input voltages: 10…690V
- Input currents: 0.5 … 6 A
- Measuring frequency: 16 … 400 Hz
- Measuring range limits: Min. span 20 °el., max. span 360 °el.
- Housing for 35mm DIN rail mounting

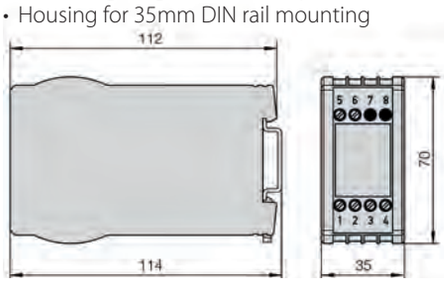

Application

Measuring transducer for measuring of phase angle between current and voltage of a single-phase or a symmetric three-phase supply. A load-independent DC current signal or an imprinted DC voltage signal is available, which stands proportionally to the phase angle between the measuring signal of current and voltage. This measuring transducer fulfills the requirements and regulations with regard to the electromagnetic compatibility (EMC) and safety (IEC 1010 and EN 61010). These measuring transducers are designed for indoor use only.

Technical data

Measuring input	
rated input voltage U_N	10...690 V (max. 230 V by auxiliary power from voltage measuring input)
rated frequency f_N	16 2/3 ... 400 Hz
rated input current I_N	ˆ 0.5 ... 6 A
response sensitivity input voltage	10 ... 120 % U_N
response sensitivity input current	< 1 % I_N
consumption	< 0.1 VA current path ˜ U_N x 1.5mA voltage path
overload capacity current input	1.2 · I_N, constant 2.0 x I_N, 1 sec.
overload capacity voltage input	1.2 · U_N, constant 2.0 · U_N, 1 sec.
measuring range	-175 °el ... +175 °el
Measuring output	
Load-independent DC current (unipolar)	0...1 mA to 0...20 mA or live-zero 1...5 mA to 4...20 mA
current output bipolar	± 1 mA to ± 20 mA
max. burden voltage	˜+ 15 V resp. ˆ -12 V
current limit under overload	˜ 1.3 x I_{AN}
residual ripple of the output current	˜ 0.5 % p.p.
Imprinted DC voltage (unipolar)	0...1 V to 0...10 V or live-zero 0.2 ...1 V to 2...10 V
voltage output bipolar	± 1 V to ± 10 V
load capacity	˜ 4 mA
current limit under overload	˜ 30 mA
voltage limit by $R_{EXT} = \infty$	˜ 25 V
Accuracy	
reference value	Δφ = 90 °
accuracy class	class 0.5
nominal values of the response time	4 periods of the measuring frequency optionally 2, 8 or 16 periods of the measuring frequency
operating temperature	-10 °C up to +55 °C
storage temperature	-40 °C up to +70 °C
Auxiliary power	
universal power supply	DC or AC (40...400 Hz)
AC/DC ranges	24 ...60 V or 85...230 V DC: - 15 % / +33 %, 2W AC: ± 15%, 4 VA
or AC-auxiliary power from voltage measuring input	24...60 V DC and 40...230 V AC (40 Hz ˜ f ˜ 400 H z) ± 15 %
power input	approx. 2 W (4 VA)
Safety	
protection class	II (protection isolated, DIN EN 61010)
electrocution protection	IP 40, housing (test wire, EN 60529) IP 20,connection terminals (test digit, EN 60529)
contamination class	2
overvoltage category	III
nominal isolation voltage (to earth)	230 V or 400 V input 230 V auxiliary power 40 V output
weight	260 g

EMBSIN 271 GD

Measuring transducer for phase angle di˜ erence

- With auxiliary voltage supply by means of an integrated AC/DC universal power supply
- Measuring principle: Monitoring of the distance of zero currents
- Measuring input: Sinus-shaped, rectangular-shaped or distorted input voltageswith dominant basis wave
- Input voltages: 10…690V
- Input currents: 0.5 … 6 A
- Measuring frequency: 16 … 400 Hz
- Measuring range limits: Min. span 20 °el., max. span 180 °el.
- Housing for 35mm DIN rail mounting

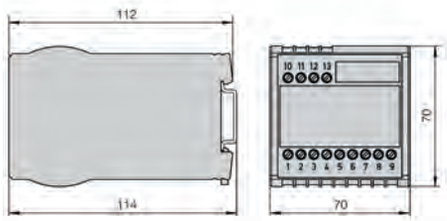

Application

Measuring transducer for measuring of phase angle between current and voltage of a single-phase or a symmetric three-phase supply. A load-independent DC current signal or an imprinted DC voltage signal is available, which stands proportionally to the phase angle between the measuring signal of current and voltage. This measuring transducer fulf lls the requirements and regulations with regard to the electromagnetic compatibility (EMC) and safety (IEC 1010 and EN 61010). These measuring transducers are designed for indoor use only.

Technical data

Measuring input	
rated input voltage U_N	10...690 V (max. 230 V by auxiliary power from voltage measuring input)
rated frequency f_N	50 Hz or 60 Hz
response sensitivity input voltage	10 ... 120 % U_N
consumption	˜ U_N x 1.5 mA voltage path
overload capacity voltage input	1.2 · U_N, constant 2.0 · U_N, 1 sec.
measuring range	-120 ° ... +120 °
Measuring output	
Load-independent DC current (unipolar)	0...1 mA to 0...20 mA or live-zero 1...5 mA to 4...20 mA
current output bipolar	± 1 mA to ± 20 mA
max. burden voltage	˜ + 15 V resp. ˆ -12 V
current limit under overload	˜ 1.3 x I_{AN}
voltage limit by $R_{EXT} = \infty$	˜ 25 V
residual ripple of the output current	˜ 0.5 % p.p.
voltage output (unipolar)	0...1 V to 0...10 V or live-zero 0.2 ...1 V to 2...10 V
voltage output bipolar	± 1 V to ± 10 V
load capacity	˜ 4 mA
current limit under overload	˜ 30 mA

Accuracy	
reference value	Δφ = 90 °
accuracy class	class 0.5
nominal values of the response time	4 periods of the measuring frequency optionally 2, 8 or 16 periods of the measuring frequency
operating temperature	-10 °C up to +55 °C
storage temperature	-40 °C up to +70 °C
Auxiliary power	
universal power supply	DC or AC (40...400 Hz)
AC/DC ranges	24 ...60 V or 85...230 V DC: - 15 % / +33 % AC: ± 15%
or AC-auxiliary power from voltage measuring input	24...60 V DC and 40...230 V AC (40 Hz ˜ f ˜ 400 H z) ± 15 %
power input	approx. 2 W (4 VA)
Safety	
protection class	II (protection isolated, DIN EN 61010)
electrocution protection	IP 40, housing (test wire, EN 60529) IP 20,connection terminals (test digit, EN 60529)
contamination class	2
overvoltage category	III
nominal isolation voltage (to earth)	230 V or 400 V input 230 V auxiliary power 40 V output
weight	270 g

EMBSIN 281 G

Measuring transducer for phase angle

- With auxiliary voltage supply by means of an integrated AC/DC universal power supply
- Measuring principle: Monitoring of the distance of zero currents
- Measuring input: Sinus-shaped, rectangular-shaped or distorted input voltageswith dominant basis wave
- Input voltages: 10…690V (linked voltage in three-phase system!)
- Input currents: 0.5 … 6 A
- Measuring frequency: 16 2/3 … 400 Hz
- Measuring range limits: 0.5 … cap … 1 … ind … 0.5
- Housing for 35mm DIN rail mounting

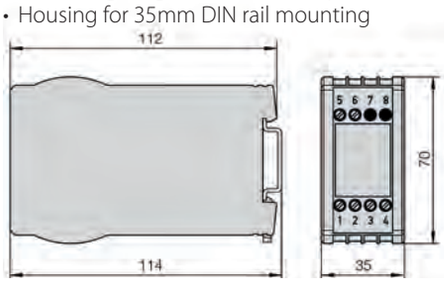

Application

Measuring transducer for measuring of power factor between current and voltage of a single-phase or a symmetric three-phase supply. A load-independent DC current signal or an imprinted DC voltage signal is available, which stands proportionally to the power factor between the measuring signal of current and voltage. This measuring transducer fulf lls the requirements and regulations with regard to the electromagnetic compatibility (EMC) and safety (IEC 1010 and EN 61010). These measuring transducers are designed for indoor use only.

Technical data

Measuring input	
rated input voltage U_N	10...690 V (max. 230 V by auxiliary power from voltage measuring input)
rated frequency f_N	16 2/3 ... 400 Hz
rated input current I_N	ˆ 0.5 ... 6 A
response sensitivity input voltage	10 ... 120 % U_N
response sensitivity input current	< 1 % I_N
consumption	< 0.1 VA current path ˝ U_N x 1.5 mA voltage path
overload capacity current input	1.2 · I_N, constant 20 x I_N, 1 sec.
overload capacity voltage input	1.2 · U_N, constant 2.0 · U_N, 1 sec.
measuring range	0.5 ... cap. ... 1 ... ind ... 0.5
Measuring output	
Load-independent DC current (unipolar)	0...1 mA to 0...20 mA or live-zero 1...5 mA to 4...20 mA
current output bipolar	± 1 mA to ± 20 mA
max. burden voltage	˝+ 15 V resp. ˆ -12 V
current limit under overload	˝1.3 x I_{AN}
voltage limit by $R_{EXT} = \infty$	˝ 25 V
residual ripple of the output current	˜ 0.5 % p.p.
Imprinted DC voltage (unipolar)	0...1 V to 0...10 V or live-zero 0.2 ...1 V to 2...10 V
voltage output bipolar	± 1 V to ± 10 V
load capacity	˜ 4 mA
current limit under overload	˝ 30 mA

Accuracy	
reference value	Δφ = 90 °
accuracy class	class 0.5
nominal values of the response time	4 periods of the measuring frequency optionally 2, 8 or 16 periods of the measuring frequency
operating temperature	-10 °C up to +55 °C
Auxiliary power	
universal power supply	DC or AC (40...400 Hz)
AC/DC ranges	24 ...60 V or 85...230 V DC: - 15 % / +33 % AC: ± 15%
or AC-auxiliary power from voltage measuring input	24...60 V DC and 40...230 V AC (40 Hz ˝ f ˝ 400 H z) ± 15 %
power input	approx. 2 W (4 VA)
Safety	
protection class	II (protection isolated, DIN EN 61010)
electrocution protection	IP 40, housing (test wire, EN 60529) IP 20,connection terminals (test digit, EN 60529)
contamination class	2
overvoltage category	III
nominal isolation voltage (to earth)	230 V or 400 V input 230 V auxiliary power 40 V output
weight	270 g

EMBSIN 351 P

Measuring transducer for phase angle di˜ erence

- With auxiliary voltage supply by means of an integrated AC/DC universal power supply
- Measuring principle: Impulse sequence modulation (TDM-process)
- Measuring input: Sinus-shaped nominal input currents and sinus-shaped nominal inputvoltages
- Input voltages: 100…690 V (linked voltage in three-phase system!)
- Input currents: 1 … 6 A
- Measuring frequency: 50 Hz or 60 Hz
- Housing for 35mm DIN rail mounting

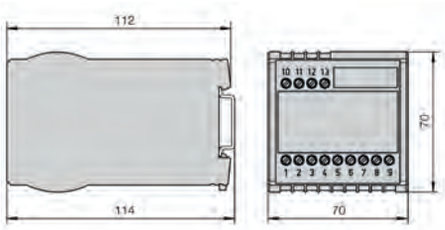

Application

Measuring transducer for measuring of the active power of a single-phase or a three-phase supply of equal or unequal phase load. A load-independent DC current signal or an imprinted DC voltage signal is available, which stands proportionally to the measuring value of the active power. This measuring transducer fulf lls the requirements and regulations with regard to the electromagnetic compatibility (EMC) and safety (IEC 1010 and EN 61010). These measuring transducers are designed for indoor use only.

Technical data

Measuring input	
rated input voltage U_N	10...690 V (linked voltage!) (max. 230 V by auxiliary power from voltage measuring input)
rated frequency f_N	50 Hz or 60 Hz
rated input current I_N	1 ... 6 A
calibration range	0.75 ... 13. x P_{Nenn} $P_{Nenn} = \sqrt{3} \times U_N \times I_N$
consumption	< I_N^2 x 0.01 ˙ per current path ˝ U_N^2 / 400 k˙ per voltage path
overload capacity current input	1.2 · I_N, constant 20 · I_N, 1 sec.
overload capacity voltage input	1.2 · U_N, constant 2.0 · U_N, 1 sec. (max. 264 V by auxiliary power from voltage maesuring input)
Measuring output	
current output(unipolar)	0...1 mA to 0...20 mA or live-zero 1...5 mA to 4...20 mA
current output bipolar	± 1 mA to ± 20 mA
max. burden voltage	± 15 V
current limit under overload	˝ 1.3 x I_{AN}
voltage limit by $R_{EXT} = \infty$	˜ 40 V
residual ripple of the output current	˜ 1 % p.p.
voltage output (unipolar)	0...1 V to 0...10 V or live-zero 0.2 ...1 V to 2...10 V
voltage output bipolar	± 1 V to ± 10 V
load capacity	˜ 4 mA
current limit under overload	˝ 30 mA

Accuracy	
reference value	output end value
accuracy class	class 0.5
responce time	<300 ms
operating temperature	-10 °C up to +55 °C
Auxiliary power	
universal power supply	DC or AC (40...400 Hz)
AC/DC ranges	24 ...60 V or 85...230 V DC: - 15 % / +33 % AC: ± 15%
or AC-auxiliary power from voltage measuring input	24...60 V DC and 40...230 V AC (40 Hz ˝ f ˝ 400 H z) ± 15 %
power input	approx. 2 W (4 VA)
Safety	
protection class	II (protection isolated, DIN EN 61010)
electrocution protection	IP 40, housing (test wire, EN 60529) IP 20,connection terminals (test digit, EN 60529)
contamination class	2
overvoltage category	III
nominal isolation voltage (to earth)	230 V or 400 V input 230 V auxiliary power 40 V output
weight	330 g

EMBSIN 361 Q

Measuring transducer for re-active power

- With auxiliary voltage supply by means of an integrated AC/DC universal power supply
- Measuring principle: Impulse sequence modulation (TDM-process)
- Measuring input: Sinus-shaped nominal input currents and sinus-shaped nominal input-voltages
- Input voltages: 100…690 V (linked voltage in three-phase system!)
- Input currents: 1 … 6 A
- Measuring frequency: 50 Hz or 60 Hz
- Housing for 35mm DIN rail mounting

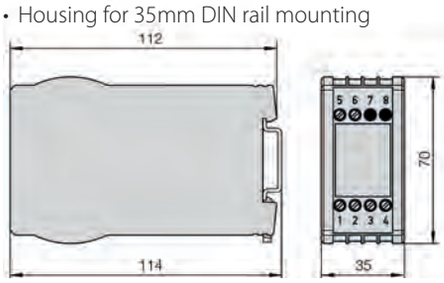

Application

Measuring transducer for measuring of the re-active power of a single-phase or a three-phase supply of equal or unequal phase load. A load-independent DC current signal or an imprinted DC voltage signal is available, which stands proportionally to the measuring value of the re-active power. This measuring transducer fulf lls the requirements and regulations with regard to the electromagnetic compatibility (EMC) and safety (IEC 1010 and EN 61010). These measuring transducers are designed for indoor use only.

Technical data

Measuring input	
rated input voltage U_N	10...690 V (linked voltage!) (max. 230 V by auxiliary power from voltage measuring input)
rated frequency f_N	50 Hz or 60 Hz
rated input current I_N	1 ... 6 A
calibration range	0.5 ... 1.0. x P_{Nenn} $P_{Nenn} = \sqrt{3} \times U_N \times I_N$
consumption	< I_N^2 x 0.01 ˙ per current path ˝ U_N^2 / 400 k˙ per voltage path
overload capacity current input	1.2 · I_N, constant 20 · I_N, 1 sec.
overload capacity voltage input	1.2 · U_N, constant 2.0 · U_N, 1 sec. (max. 264 V by auxiliary power from voltage maesuring input)
Measuring output	
current output(unipolar)	0...1 mA to 0...20 mA or live-zero 1...5 mA to 4...20 mA
current output bipolar	± 1 mA to ± 20 mA
max. burden voltage	± 15 V
current limit under overload	˝ 1.3 x I_{AN}
voltage limit by $R_{EXT} = \infty$	˜ 40 V
residual ripple of the output current	˜ 1 % p.p.
voltage output (unipolar)	0...1 V to 0...10 V or live-zero 0.2 ...1 V to 2...10 V
voltage output bipolar	± 1 V to ± 10 V
load capacity	max. 4 mA
current limit under overload	˝ 30 mA

Accuracy	
reference value	output end value
accuracy class	class 0.5
response time	< 300ms
operating temperature	-10 °C up to +55 °C
Auxiliary power	
universal power supply	DC or AC (40...400 Hz)
AC/DC ranges	24 ...60 V or 85...230 V DC: - 15 % / +33 % AC: ± 15%
or AC-auxiliary power from voltage measuring input	24...60 V DC and 40...230 V AC (40 Hz ˝ f ˝ 400 H z) ± 15 %
power input	approx. 2 W (4 VA)
Safety	
protection class	II (protection isolated, DIN EN 61010)
electrocution protection	IP 40, housing (test wire, EN 60529) IP 20,connection terminals (test digit, EN 60529)
contamination class	2
overvoltage category	III
nominal isolation voltage (to earth)	230 V or 400 V input 230 V auxiliary power 40 V output
weight	330 g

Order lists

EMBSIN 100 I – Measuring transducer for AC current, without auxiliary voltage supply

Features	Order no.					
EMBSIN 100 I, Measuring transducer for AC current Order no.: 100100 I – Mxxxx	100100 I –	M	X	X	X	X
1. Construction Housing for 35 mm DIN rail		M				
2. Measuring range 0...1/5 A			1			
0...1.2/6 A			2			
9 Nonstandard (A), 0...0.5 A up to 0...7.5 A (only one measuring range!) _____ A			9			
3. Output signal 0...5 mA, R_a ˜ 3 k°				1		
0...10 mA, R_a ˜ 1,5 k°				2		
0...20 mA, R_a ˜ 750 °				3		
4. Measuring range adjustable Measuring range fixed					0	
Measuring end value adjustable approx. ±10 %					1	
5. Test certificates without test certificate						0
with test certificate in German						D
with test certificate in English						E

Rated frequency of the measuring signal: 50/60 Hz

EMBSIN 101 I/121 U – Measuring transducer for AC current / AC voltage

Features	Order no.							
EMBSIN 101 I, Measuring transducer for AC current Order no.: 100101 I – Mxx xx	100101 I –	M	X	X		X	X	X
EMBSIN 121 U , Measuring transducer for AC voltage Order no.: 100121 U – Mx xxx	100121 U –	M	X		X	X	X	
1. Construction Housing for 35 mm DIN rail		M						
2. Frequecy of the input voltage / input current								
Rated frequency 50/60 Hz			1					
3. Measuring range								
0...1 A				A				
0...5 A				B				
Z) _____ A ! Z) Nonstandard [A] 0...0.8 up to 0...1.2 or 0...4 up to 0...6				Z				
0...100 V					A			
0...250 V					B			
0...500 V					C			
Z) _____ V ! Z) Nonstandard (V) 0...50 bis 0...500 Max. 300 V rated voltage to earth (Rated voltages acc. to EN 61010)					Z			
4. Output signal								
0...20 mA						1		
4...20 mA						2		
4...20 mA, 2-wire-connection / feed						3		
9) _____ mA ! 9) Nonstandard [mA] 0...2.5 up to 0...< 20 1...5 up to < (4... 20)						9		
0...10 V						A		
Z) _____ V ! Z) Nonstandard (V) 0...5.0 up to 0...< 10 1...5 up to 2...10						Z		
5. Auxiliary voltage								
Auxiliary voltage U_h: 24 V AC							1	
Auxiliary voltage U_h: 110 V AC							2	
Auxiliary voltage U_h: 115 V AC							3	
Auxiliary voltage U_h: 120 V AC							4	
Auxiliary voltage U_h: 230 V AC							5	
Auxiliary voltage U_h: 400 V AC, ! max. 300 V to earth!							6	
Auxiliary voltage U_h: 24 V DC							A	
Auxiliary voltage U_h: 24 V DC via output circuit							B	
Auxiliary voltage U_h: 85…230 V AC/DC							C	
Auxiliary voltage U_h: 24…60 V AC/DC							D	
U_h...rated voltage permissible tolerances for AC –15...+33 % permissible tolerances for DC –15...+15 % permissible tolerances for DC via output circuit –50...+33 % ! 1) to A) not to be combined with output signal, order no.: 3) ! B) not to be combined with output signal, order no.: 1), 2), 9), A), Z)								
6. Test certificates								
without test certificate								0
with test certificate in German								D
with test certificate in English								E

EMBSIN 201 IE/221 UE – Measuring transducer for AC current / AC voltage, effective value measuring

Features	Order no.									
EMBSIN 201 IE, Measuring transducer for AC current effective value, Order no.: 100201 IE - Mxx xx x	100201 IE –	M	X	X		X	X		X	X
EMBSIN 221 UE, Measuring transducer for AC voltage effective value, Order no.: 100221 UE – Mx xx xx	100221 UE –	M	X		X	X		X	X	X
1. Construction Housing for 35 mm DIN rail		M								
2. Frequecy of the input voltage / input current										
Rated frequency 50/60 Hz			1							
Rated frequency 400 Hz			2							
3. Measuring range										
0...1.0/5.0 A				1						
0...1.2/6.0 A				2						
9) _____ A Lower / higher measuring range dependent on connection availability ! Z) Nonstandard [A] 0...0.1/0.5 up to 0...< 1.2/6 Measuring range end value ratio 1 : 5				9						
0...100/√3 V					A					
0...110/√3 V					B					
0...100 V					C					
0...110 V					D					
0...116.66 V					E					
0...120 V					F					
0...125 V					G					
0...133.33 V					H					
0...150 V					J					
0...250 V					K					
0...500 V					L					
Z) _____ V ! Z) Nonstandard (V): 0...20 up to 0...690 * with auxiliary voltage from measuring input min. 24 V/max. 230 V ! see selection criteria 5 digit 3) + 4) ! * > 400 V only linked voltage !					Z					
4. Output signal										
0...20 mA						1				
4...20 mA						2				
9) _____ mA ! 9) Nonstandard [mA]: 0...1.00 up to 0...< 20 0.2...1 up to < (4...20)						9				
A) 0...10 V						A				
Z) _____ V ! Z) Nonstandard (V): 0...1.00 up to 0...< 10 0,2...1 up to 2...10						Z				
5. Auxiliary voltage										
Auxiliary voltage U_h: 85...230 V AC/DC 1							1	1		
Auxiliary voltage U_h: 24...60 V AC/DC 2							2	2		
Auxiliary voltage from measuring input (˜ 24...60 V AC)								3		
Auxiliary voltage from measuring input (˜ 85...230 V AC)								4		
Auxiliary voltage U_h: 24 V AC/24...60 V DC from low voltage side							5	5		
U_h...rated voltage Tolerances: DC –15...+33 % AC –15...+15 % ! 3) Not to be combinded with measuring range, order no.: C)...L) ! 4) Not to be combined with measuring range, order no.: A, B, L										
6. Respones time										
300 ms (standard)									1	
50 ms									2	
7. Test certificates										
without test certificate										0
with test certificate in German										D
with test certificate in English										E

EMBSIN 120 U – Measuring transducer for alternating voltage, without auxiliary voltage supply

Features	Order no.					
EMBSIN 120 U, Measuring transducer for alternating voltage Order no.: 100120 U – Mxxxx	100120 U –	M	X	X	X	X
1. Construction Housing for 35 mm DIN rail		M				
2. Measuring range						
0...100/ 3 V			A			
0...110/ 3 V			B			
0...120/ 3 V			C			
0...100 V			D			
0...110 V			E			
0...116.66 V			F			
0...120 V			G			
0...125 V			H			
0...133.33 V			J			
0...150 V			K			
0...250 V			L			
0...400 V			M			
0...500 V !			N			
Z) _____ V ! Z) Nonstandard (V): 0...20 V up to 0...500 V max. 250 V rated voltage to earth (Rated voltages acc. to EN 61010)			Z			
3. Output signal						
0...5 mA, R_a ˜ 3 k°				1		
0...10 mA, R_a % ˜ 1,5 k°				2		
0...20 mA, R_a ˜ 750 °				3		
4. Measuring range adjustable						
Measuring range fixed					0	
Measuring end value adjustable approx. ± 10 %					1	
5. Test certificates						
without test certificate						0
with test certificate in German						D
with test certificate in English						E

EMBSIN 241 F/241 FD – Measuring transducer for frequency / frequency difference

Features	Order no.								
EMBSIN 241 F, Measuring transducer for frequency effective value, Order no.: 100241 F – Mxx xx x	100241 F –	M	X	X		X	X	X	X
EMBSIN 241 FD, Measuring trandsucer for frequency difference effective value, Order no.: 100241 FD – Mxx xx x	100241 FD –	M	X		X	X	X	X	X
1. Construction Housing for 35 mm DIN rail		M							
2. Rated nominal voltage EMBSIN 241 FD → generator and bus bar input voltage									
10...230 V			1						
> 230...690 V ! 3-phase-system: Input voltage = linked voltage ! 2) not permissible by auxiliary voltage starting from measuring input			2						
3. Measuring range									
45...50...55 Hz				1					
47...49...51 Hz				2					
47.5...50...52.5 Hz				3					
48...50...52 Hz				4					
58...60...62 Hz				5					
9) _____ Hz ! 9) Nonstandard [Hz]; Limit values: Start value f_a ˜ 10, end value f_e ˜ 1500 $f_a/(f_e-f_a) < 50$				9					
f_s = 50 Hz/f_g = 49.5...50...50.5 Hz					1				
f_s = 50 Hz/f_g = 47.5...50...52.5 Hz					2				
f_s = 50 Hz/f_g = 45...50...55 Hz					3				
f_s = 50 Hz/f_g = 40...50...60 Hz					4				
f_s = 60 Hz/f_g = 57.5...60...62.5 Hz					5				
9) _____ Hz ! 90) Nonstandard [Hz]: upon request					9				
4. Output signal									
0...20 mA						1			
4...20 mA						2			
9) _____ V ! 9) Nonstandard [mA]: 0...1.00 up to 0...< 20, –1.00...0...1.00 up to –20...0...20, 1...5 up to < (4...20)						9			
0...10 V						A			
Z) _____ V ! Z) Nonstandard (V): 0...1.00 up to 0...< 10, 0.2...1 up to 2...10 –1.00...0...1.00 up to –10...0...10						Z			
5. Auxiliary voltage									
Auxiliary voltage U_h: 85...230 V AC/DC							1		
Auxiliary voltage U_h: 24...60 V AC/DC							2		
Auxiliary voltage from measuring input (˜ 24...60 V AC)							3		
Auxiliary voltage from measuring input (˜ 85...230 V AC)							4		
Auxiliary voltage U_h: 24 V AC/24...60 V DC from low voltage side							5		
U_h...Rated voltage Tolerances: DC –15...+33 %, AC –15...+15 % ! 3) + 4): Not to be combined with input rated voltage, order no.: 2)									
6. Response time									
4 periods of the input frequency (standard)								1	
2 periods of the input frequency								2	
8 periods of the input frequency								3	
16 periods of the input frequency ! 1) response time 4 periods = standard								4	
7. Test certificates									
without test certificate									0
with test certificate in German									D
with test certificate in English									E

EMBSIN 271 G/281 G – Measuring transducer for phase angle / power factor

Features	Order no.											
EMBSIN 271 G, Measuring transducer for phase angle Order no.: 100271 G – Mxxxxxxxxx	100271G –	M	X	X	X	X	X	X	X	X	X	X
EMBSIN 281 G, Measuring transducer for power factor Order no.: 100281 G – Mxxxxxxxxx	100281G –	M	X	X	X	X	X	X	X	X	X	X
1. Construction Housing for 35 mm DIN rail		M										
2. Type of measuring												
1) For phase angle (proportional ˙)			1									
2) For power factor (proportional cos ˙)			2									
3. Application												
Single-phase AC current				1								
3- or 4-wire three-phase current, balanced load U: L_1–L_2; I: L_1				2								
3- or 4-wire three-phase current, balanced load U: L_2–L_3; I: L_2				3								
3- or 4-wire three-phase current, balanced load U: L_3–L_1; I: L_3				4								
3- or 4-wire three-phase current, balanced load U: L_1–L_3; I: L_1				5								
3- or 4-wire three-phase current, balanced load U: L_2–L_1; I: L_2				6								
3- or 4-wire three-phase current, balanced load U: L_3–L_2; I: L_3				7								
3- or 4-wire three-phase current, balanced load U: L_1–L_2; I: L_3				A								
3- or 4-wire three-phase current, balanced load U: L_2–L_3; I: L_1				B								
3- or 4-wire three-phase current, balanced load U: L_3–L_1; I: L_2				C								
4. Rated input frequency												
Rated frequency 50 Hz						1						
Rated frequency 60 Hz						2						
9) _____ Hz ! 9) Nonstandard [Hz]: 10 ˜ f_n ˜ 400 by auxiliary voltage from measuring input min. 40 Hz						9						
5. Rated input voltage												
Input voltage U_n: 100 V							1					
Input voltage U_n: 230 V							2					
9) Input voltage U_n: _____ V ! 3-wire-system: U_n = linked voltage ! 9) Nonstandard (V): ˜ 10.00 up to 690 V By auxiliary voltage from measuring input min. 24 V/max. 230 V see selection criteria 9, digit 3) and 4)							9					
6. Rated input current												
Input current I_n: 1 A								1				
Input current I_n: 5 A								2				
9) Input current I_n: _____ A								9				
7. Measuring range												
Measuring range: –60...0...60° el									1			
Measuring range cos ˙: 0.5...cap...1...ind...0.5									2			
9) Measuring range: _____ ! 1) Not to be combined with measuring type, order no.: 2) ! 2) Not to be combined with measuring type, order no.: 1) ! 9) Nonstandard, Measuring range within 1...ind...0...cap...1...ind...0...cap...1 or –180...0...180° el clear output value, only up to –175...0...175° el; measuring range ˜ 20° el									9			

Continuation EMBSIN 271 G/281 G

Features	Order no.											
EMBSIN 271 G, Measuring transducer for phase angle Order no.: 100271 G – Mxxxxxxxxx	100271G –	M	X	X	X	X	X	X	X	X	X	X
EMBSIN 281 G, Measuring transducer for power factor Order no.: 100281 G – Mxxxxxxxxx	100281G –	M	X	X	X	X	X	X	X	X	X	X
8. Output signal												
0...20 mA									1			
4...20 mA									2			
9) _____ mA ! 9) Nonstandard [mA]: 0...1.00 up to 0...< 20 –1.00...0...1.00 up to –20...0...20 1...5 up to < (4...20)									9			
0...10 V									A			
Z) _____ V ! Z) Nonstandard (V): 0...1.00 up to 0...< 10 0.2...1 up to 2...10 –1.00...0...1.00 up to –10...0...10									Z			
9. Auxiliary voltage												
Auxiliary voltage U_h: 85...230 V AC/DC										1		
Auxiliary voltage U_h: 24...60 V AC/DC										2		
Auxiliary voltage from measuring input (˜ 24...60 V AC)										3		
Auxiliary voltage from measuring input (˜ 85...230 V AC)										4		
Auxiliary voltage U_h: 24 V AC/24...60 V DC from low voltage side										5		
U_h = Rated voltage Tolerances: DC –15...+33 % AC –15...+15 % ! 3): Not to be combined with rated input voltage, order no.: 1) und 2)												
10. Response time												
4 periods of the input frequency ! 1) 4 periods = standard											1	
2 periods of the input frequency											2	
8 periods of the input frequency											3	
16 periods of the input frequency											4	
11. Test certificates												
without test certificate												0
with test certificate in German												D
with test certificate in English												E

EMBSIN 271 GD – Measuring transducer for phase angle difference

Features	Order no.								
EMBSIN 271 GD, Measuring transducer for phase angle difference Order no.: 100271 GD – Mxxxxxxxxx	271GD –	M	X	X	X	X	X	X	X
1. Construction Housing for 35 mm DIN rail		M							
2. Rated input frequency									
Rated frequency 50 Hz			1						
Rated frequency 60 Hz			2						
9) Rated frequency _____ Hz ! 9) Nonstandard [Hz]: ˜ 10 up to 1500 by auxiliary voltag from measuring input: 40 Hz ˜ f_n ˜ 400 Hz			9						
3. Rated input voltage Generator and bus bar									
Input voltage U_n: 100 V				1					
Input voltage U_n: 230 V				2					
9) Input voltage U_n: _____ V 3-phase-system: Input voltage = linked voltage ! 9) Nonstandard (V): ˜ 10 up to 690, by auxiliary voltage from measuring input min. 24 V/max. 230 V ! see selection criteria 6, digit 3) + 4)				9					
4. Measuring range									
Measuring range: –120°...0°...+120° el					1				
9) Measuring range: _____ ° el ! 9) Nonstandard [°el], Measuring range within –10...0...10 up to –180...0...+180 clear output value, only up to –175°...0...+175° el					9				
5. Output signal									
0...20 mA						1			
4...20 mA						2			
9) _____ mA ! 9) Nonstandard [mA]: 0...1.00 up to 0...< 20 –1.00...0...1.00 up to –20...0...20 1...5 up to < (4...20)						9			
A) 0...10 V						A			
Z) _____ V ! Z) Nonstandard (V): 0...1.00 up to 0...< 10 0.2...1 up to 2...10 –1.00...0...1.00 up to –10...0...10						Z			
6. Auxiliary voltage									
Auxiliary voltage U_h: 85...230 V AC/DC							1		
Auxiliary voltage U_h: 24...60 V AC/DC							2		
Auxiliary voltage from measuring input (˜ 24...60 V AC)							3		
Auxiliary voltage from measuring input (˜ 85...230 V AC)							4		
Auxiliary voltage U_h: 24 V AC/24...60 V DC from low voltage side							5		
U_h = Rated voltage Tolerances: DC –15...+33 % AC –15...+15 % ! 3) + 4): Not to be combined with rated input voltage, order no.: 2)									
7. Response time									
4 periods of the input frequency ! 1) 4 periods = standard								1	
2 periods of the input frequency								2	
8 periods of the input frequency								3	
16 periods of the input frequency								4	
8. Test certificates									
without test certificate									0
with test certificate in German									D
with test certificate in English									E

EMBSIN 351 P/361 Q – Measuring transducer for active power / re-active power

Features	Order no.													
EMBSIN 351 P, Measuring transducer for active power Order no.: 100351 P – Mx xxxx xxx	100351 P –	M	X	X	X	X	X	X		X	X	X	X	X
EMBSIN 361 Q, Measuring transducer for re-active power Order no.: 100361 Q – M xxxx xxxx	100361 Q –	M		X	X	X	X		X	X	X	X	X	X
1. Construction Housing for 35 mm DIN rail		M												
2. Application														
3-/4-wire three-phase current, balanced load (U: L_1, L_2, L_3 I: L_1)			1											
3-wire three-phase current, unbalanced load			2											
4-wire three-phase current, unbalanced load			3											
3. Rated input frequency														
Rated frequency 50 Hz				1										
Rated frequency 60 Hz				2										
4. Rated input voltage														
U_n; 100...115 V; _____ V values to be stated!					1									
U_n; 200...230 V; _____ V					2									
U_n; 380...440 V; _____ V					3									
U_n; 600...690 V; _____ V					4									
9) Nonstandard U_n; _____ V ! 1)...4): True effective nominal voltages to be stated ! 9): Nonstandard (V): > 115 up to < 600 Input voltage U_n = linked voltage !					9									
5. Rated input current														
Input current I_n: 1 A						1								
Input current I_n: 5 A						2								
6. Measuring range														
Measuring range bipolar: _____ W							1							
Measuring range unipolar: _____ W							2							
Measuring range end values to be stated in Watt, i.e. 500 W by measuring range bipolar –500...500 1000 W by measuring range unipolar 0...1000 permissible end values: 0.75...1.3 x U_n x I_n x ¸ $\sqrt{3}$ [W]														
Measuring range bipolar: _____ var								1						
Measuring range unipolar: _____ var Measuring range end values to be stated in var, i.e. 500 var by measuring range bipolar –500...500 1000 var by measuring range unipolar 0...1000, permissible end values: 0.5...1.0 x U_n x I_n x ¸ $\sqrt{3}$ [var]								2						
7. Output signal, start value														
Output bipolar, start value –100 % end value									1					
Output unipolar, start value 0									2					
Output live-zero, start value = 20 % end value ! 1) Output bipolar not possible with measuring range unipolar, see selection criteria 2, digit 2)									3					
8. Output signal, end value														
End value: 20 mA										1				
End value: 10 mA										2				
End value: 5 mA										3				
End value: 2.5 mA										4				
End value: 10 V										A				
9. Auxiliary voltage														
Auxiliary voltage U_h: 85...230 V DC/AC											1			
Auxiliary voltage U_h: 24...60 V DC/AC											2			
Auxiliary voltage from measuring input (˝ 85...230 V AC)											4			
Auxiliary voltage U_h: 24 V AC/24...60 V DC Connection via low voltage side! Tolerances: DC: –15...+ 33 %; AC: –15...+15 % ! 4) Not to be combined with rated input voltage, order no. 3) and 4)											5			
10. Additional customer text														
without customer text												0		
with customer text												1		
11. Test certificates														
without test certificate														0
with test certificate in German														D
with test certificate in English														E

MT 440

Programmable measuring transducer for all electrical parameters

- with auxiliary voltage supply by means of an integrated AC/DC universal power supply
- housing for 35mm DIN rail mounting
- monitoring of up to 50 di˜ erent parameters (V, A, kW, kVA, …)
- multifunctional measuring transducer with 4 freely programmable measuring outputs
- measuring outputs can be set as analogue output, impulse output, relay output orcontrol output
- by default with USB 2.0 interface (not galvanically isolated!)
- optionally with additional serial interface RS232 or RS485
- communication protocol: MODBUS RTU
- automatic selection of current and voltage inputs
- easy parameter setting due to user-friendly setting software, which forms the delivery
- measuring frequency: 50/60 Hz or 400 Hz

Application

The programmable measuring transducer MT 440 enables to capture up to 50 di˜ erent electrical parameters of the connected network. Large input ranges of the input volumes allow for the monitoring of almost all standardized electrical parameters. Four integrated, freely programmable measuring outputs permit the simultaneous use of the assigned measuring value for control and monitoring purposes.

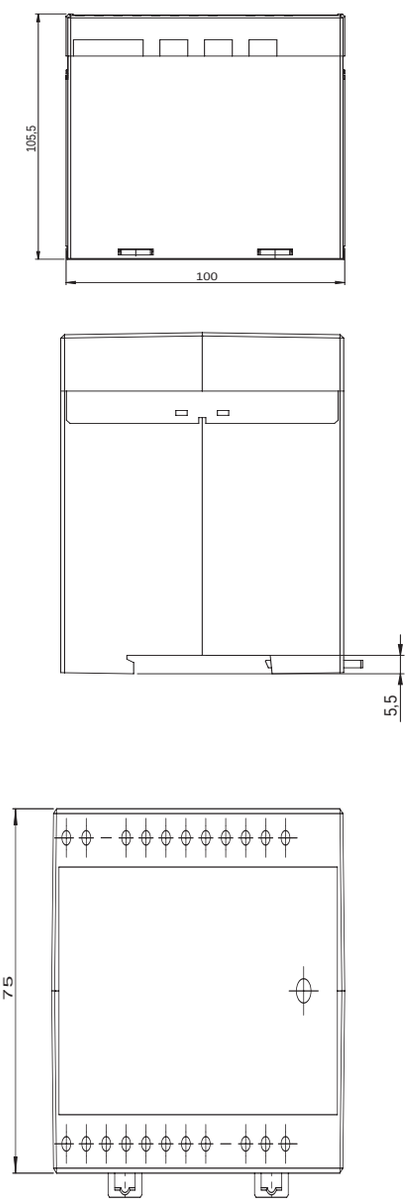

Supported measutements

	Basic measurements
Phase	Voltage U_1, U_2, U_3 and U˜
	Current I_1, I_2, I_3, I_n, I_t and I_a
	Active power P_1, P_2, P_3 and P_t
	Re-active power Q_1, Q_2, Q_3 and Q_t
	Apparent power S_1, S_2, S_3 and S_t
	Power factor PF_1, PF_2, PF_3 and PF˜
	Phase angle φ_1, φ_2, φ_3, and φ˜
	THD of phase voltage Uf_1, Uf_2 and Uf_3
	THD of phase angle I_1, I_2 and I_3
Phase-to-phase	Phase-to-phase voltage U_{12}, U_{23}, U_{31}
	Average phase-to-phase voltage U-
	Phase-to-phase angle) φ_{12}, φ_{23}, φ_{31}
	THD of phase-to-phase voltage
Energy	Counter 1
	Counter 2
	Counter 3
	Counter 4
	Active tari˜
	Other measurements
MD values	Phase current I_1, I_2, I_3
	Active power P (positive)
	Active power P (negative)
	Re-active power Q – L
	Re-active power Q – C
	Apparent power S
Measurements	Frequency
	Internal temperature

Technical data

Measuring input	
rated input voltage U_N	500 V (phase against neutral) Automatic selection of the measuring range
voltage measuring range	62.5 V, 125 V, 250 V, 500 V
rated input current I_N	5 A
current measuring input	1 A, 5 A, 10 A
Overload capacity	
current input (acc. IEC 60688)	15 A constant, 20 x I_N, 5 x 1 sec.
voltage input (acc. IEC 60688)	600 V constant, 2 x U_N, 10 sec.
Measuring output	
DC current outputs	
4 output ranges, programmable	-100 % ... 0 ... 100 % -(1 ... 20) mA ... 0 ... (1 ... 20) mA
control range	± 120 % I_{AN}
max. burden voltage	˝ 10 V
max. output current at overload	35 mA
max. output voltage at open current output	35 V
max. burden resistance	R_{max} [k˙] = 10 V / I_{AN} [mA]
response time	˝ 50 ms (analog F AST)
residual ripple of the output current	˝ 1 % p .p.
DC voltage outputs	
2 output ranges, programmable	-100 % ... 0 ... 100 % -(1 ... 10) V ... 0 ... (1 ... 10) V
control range	± 120 %
max. output voltage at overload	120 % nominal
max. output current	20 mA
min. burden resistance	R_{BMIN} [k˙] = U_{AN} / 20 mA
response time	˝ 50 ms (analog F AST)
residual ripple of the output voltage	˝ 1 % p .p.
accuracy	
IEC 60688	class 0.5
auxiliary power	
universal power supply	AC 40 ... 276 V, (45 ... 65 Hz) DC 24 ... 300 V
power input	˝ 8 VA

Reference conditions	
ambient temperature	15 ... 30 ° C
input signal	0 ... 100 % I_N
frequency	45 ... 65 Hz
Connection terminals	
screw terminals	2.5 mm², wire with ferrule 4.0 mm², solid conductor
setting software	MiQen software for communication and parameterization of transducer
interface (optionally)	RS232 resp. RS485
Operating conditions	
ambient temperature	-10 ... **0 ... 45** ... 55 °C
operating temperature	- 30 ... + 70 °C
storage temperature	- 40 ... + 70 °C
average annual humidity	˝ 93 %
altitude	˝ 2000 m
Safety	
electrocution protection	IP 40 (IP 20 for connection terminals)
ontamination class	2
installation category (EN 61010-1)	CAT III; 600 V, measuring inputs CAT III; 300 V, auxiliary voltage input
test voltage (DIN 57411)	3320 V AC_{RMS}, auxiliary power against input / output / interface 3320 V AC_{RMS}, auxiliary power against current input / voltage input 3320 V AC_{RMS} curent input against voltage input
housing material	PC / ABS / UL 94 V-0
standards	EN 61010-1; 2001 EN 60688; 1955 / A2; 2001 EN 61326-1; 2006 EN 60529; 1997 / A1; 2000 EN 60068-2-1/ -2/ -6/ -27/ -30
dimensions (B x H x T)	100 x 105 x 75 mm
weight	370g

MT 440

Programmable measuring transducer for all electrical parameters

Connection diagram

The voltage inputs of the measuring transducer can be connected directly to a low-voltage network or to a high-voltage network via a high-voltage transformer.
The current inputs of the measuring transducer can be directly connected to a low-voltage network via a low-voltage current transformer or to a high-voltage network via a high-voltage current transformer.

single-phase
current - 1b

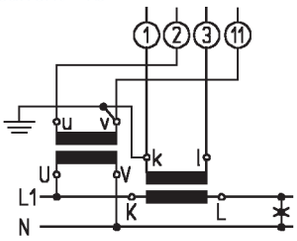

3-wire
three-phase
current - 3b
balanced load

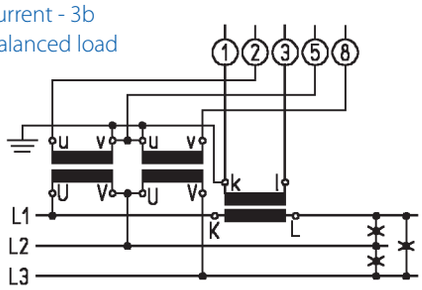

3-wire
three-phase
current - 3u
unbalanced load

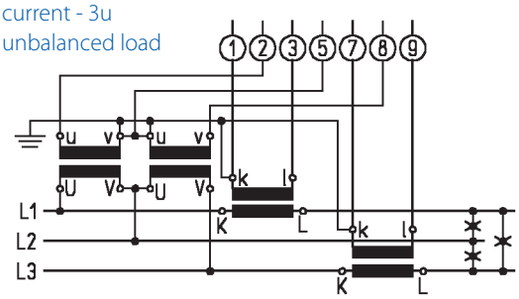

4-wire
three-phase
current - 4b
balanced load

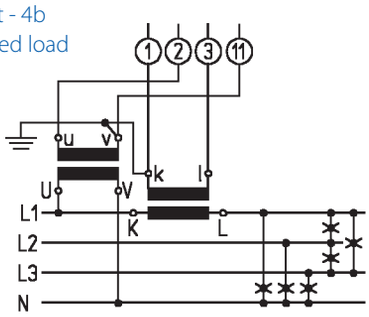

4-wire
three-phase
current - 4u
unbalanced load

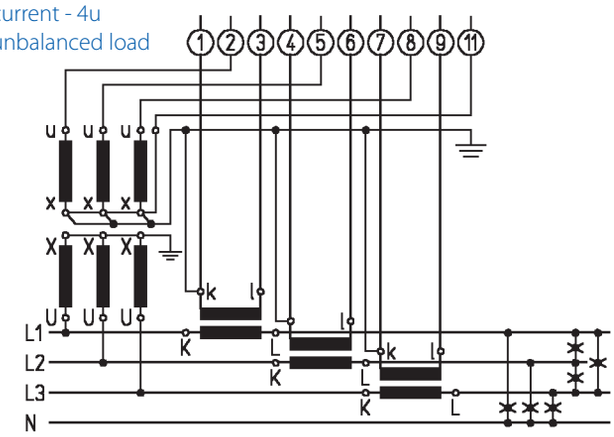

Function			Connection
measuring input	AC current	I_{L1}	1/3
		I_{L2}	4/6
		I_{L3}	7/9
	AC voltage	U_{L1}	2
		U_{L2}	5
		U_{L3}	8
		N	11
measuring outputs	output 1	ω +	15
		ω ϑ	16
	output 2	ω +	17
		ω ϑ	18
	output 3	ω +	19
		ω ϑ	20
	output 4	ω +	21
		ω ϑ	22
auxiliary voltage supply		+ / AC (L)	13
		- / AC (L)	14
interface	RS232 / RS485	R_X A	23
		GND NC [1]	24
		T_X / B	25

[1] -NC- do not connect

MT 440 – Programmable measuring transducer for all electrical values

Features	Order no.							
MT 440, programmable measuring transducer all eletrical values Order no.: 100440 – xxxxxxx	100440 –	X	X	X	X	X	X	X
1. Auxiliary voltage								
Universal (40...276 V AC, 45...65 Hz; 24...300 V DC), 8 VA		1						
2. Rated input frequency								
Rated frequency 50/60 Hz			1					
Rated frequency 400 Hz			2					
3. Communication type								
without				0				
RS232				1				
RS485				2				
4. Output 1								
without					0			
analogue (< 100 ms)					1			
fast analogue (< 50 ms)					2			
solid state relay					3			
electromechanical relay					4			
5. Output 2								
without						0		
analogue (< 100 ms)						1		
fast analogue (< 50 ms)						2		
solid state relay						3		
electromechanical relay						4		
6. Output 3								
without							0	
analogue (< 100 ms)							1	
fast analogue (< 50 ms)							2	
solid state relay							3	
electromechanical relay							4	
7. Output 4								
without								0
analogue (< 100 ms)								1
fast analogue (< 50 ms)								2
solid state relay								3
electromechanical relay								4

Frequency output for measuring transducers

(frequency module)

Type:

FM

Application

The frequency module is integrated in a measuring transducer and serves for converting the input variable of the measuring transducer into a frequency.

Function

The variable generated by the measuring transducer proportionally to the input is transmitted to a voltage frequency converter and is converted into a pulse train there. A subsequent divider determines the frequency. It is made available as a square-wave signal or as "open-collector"output.

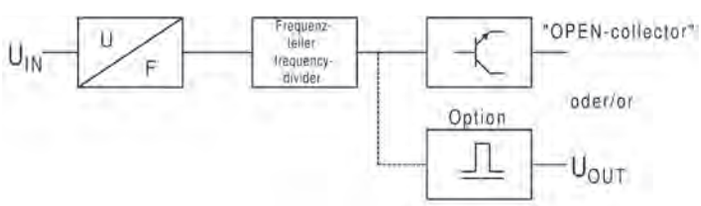

Technical data

Input	Arbitrary measuring transducer	
Output	Output variable	Frequency
	Nominal value	a value from 0-5 Hz to 0-10 kHz
	Open collector	NPN, max. 30 V, max. load 100 mA
	Option	square-wave signal 5 V, max. load 10 mA
	Pulse / pause	50 / 50 %
Transfer behavior	Accuracy	± 0.5 %
	Temperature range	- 15 °C to +20 °C to +30 °C to +55 °C
	Temperature inf uence	< 0.3 % at 10 K
	Auxiliary voltage inf uence	no
	External magnetic field influence	no (400 A/m)
	Response time	< 400 ms
	Limiting	max. 2-fold in case of overload
	Test voltage	4 kV between input, output, auxiliary voltage

Note:
The frequency module is installed in the measuring transducer used. This does not cause changes to the housing dimensions.
By installing the frequency module in the measuring transducer, further outputs are not available.

Relay module for measuring transducers

for limit value monitoring

Type:

RM.1

Application

The relay module can only be used in connection with a measuring transducer and serves for monitoring of a set limit value triggering a relay when being exceeded.

Function

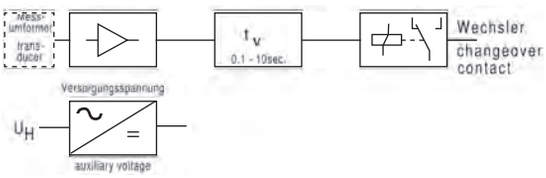

The variable generated by the measuring transducer proportionally to the input is transmitted to a comparator and is compared to the set limit value (0-100 %) there. Thereafter, the comparative value is sent to a driver stage via an adjustable timing element (0.1-10 s) where the stage then activates the output relay and the LED display. The relay module is permanently connected to the measuring transducer.

Connection

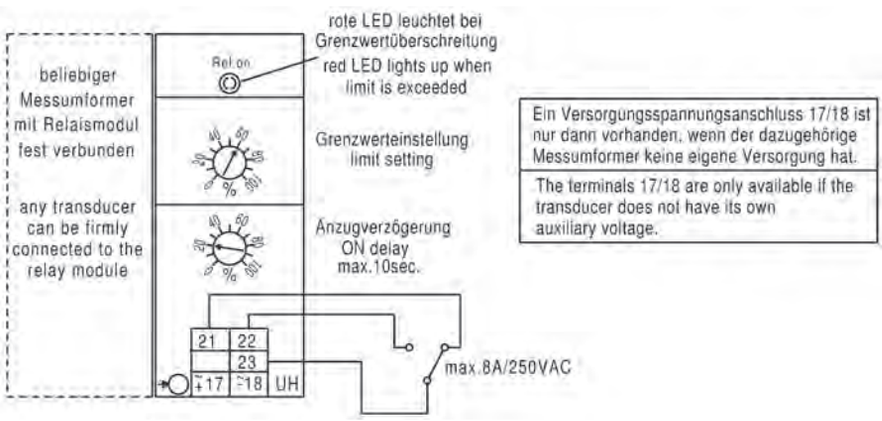

Technical data

Input	Arbitrary measuring transducer	
	Limit value adjustment	0-100 %
	Relay contact	1 changeover contact
	Function indicator	red LED lights up with relay energized
	Test voltage	4 kV between measuring input and relay contact
Switching characteristic	Switching accuracy	± 5 % of full scale
	Hysteresis	approx. 2 % of full scale
	Response delay	0.1-10 s, adjustable
	Temperature range	- 15 °C to +20 °C to +30 °C to +55 °C
	Temperature inf uence	< 0.1 % at 10 K
	Switching capacity	max. 8 A, 250 V AC, 2000 VA
Dimensions	Housing	Housing A, (22.5 mm wide) Page A1
Weight		170 g
Installation	Fastening	Snap-on fastening on top hat rail 35 mm accord. to DIN EN 60 715
	Electrical connection	Screw terminal max. 4 mm²

Measuring transducer for alternating current (AC)

(sinusoidal) for direct connection

up to 50 A, 60 A, 100 A or 150 A

Type:

MA-1.1s dir.

Application

The measuring transducer MA-1.1s dir. is used for the direct transformation of a sinusoidal alternating current into an impressed direct current or direct voltage signal.

Function

The alternating current to be measured is transmitted to a current transformer - serving for galvanic isolation and transformation - via a through hole and from there to the downstream rectifier circuit. The direct voltage generated there is amplified and transformed into an impressed direct current or in an impressed direct voltage. The output is no-load proof and short-circuit proof. Only for "live zero", an auxiliary voltage is required.

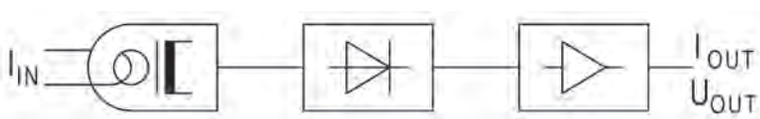

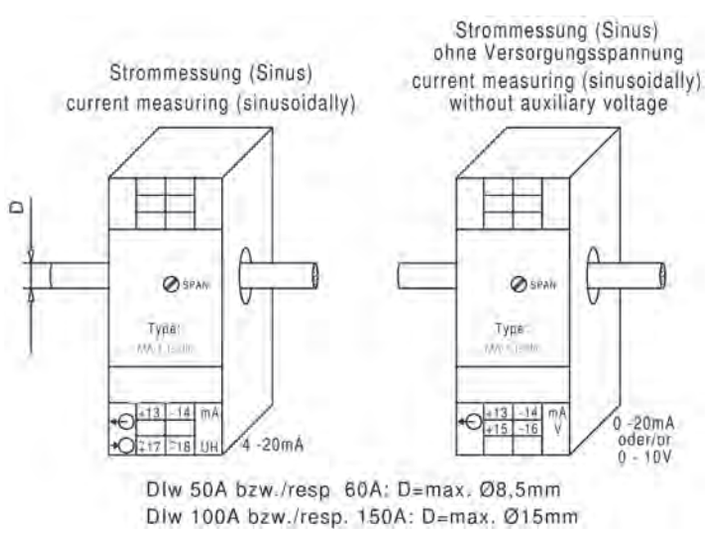

Technical data

Input	Input variable	sinusoidal alternating current				
	Rated values	Inputs				
		0- 50 A	**0-60 A**	**0-100 A**	**0-150 A**	
		0-10 A	0-12 A	0-20 A	0-30 A	Pass through primary conductor 5 times
		0-12.5 A	0-15 A	0-25 A	0-37.5 A	Pass through primary conductor 4 times
		0-25 A	0-30 A	0-50 A	0-75 A	Pass through primary conductor twice
		0-50 A	0-60 A	0-100 A	0-150 A	Pass through primary conductor once
	Rated frequency	50 Hz, 60 Hz or 400 Hz				
	Overload permanent	2-fold				
	High surge load	20-fold, 1 s				
Output	Output variables	Single output				
	Rated values	0-20 mA / 500 ˙ load or				
		0-10 V / max. load 10 mA				
	Option	● "live zero" 4-20 mA / 500 ˙ load				
		(auxiliary voltage required)				
Transfer behavior	Accuracy	± 0.5 % at 5-100 % of rated value				
	Frequency influence	< 0.05 % with 10 Hz frequency change				
	Temperature range	-15 °C to +20 °C to +30 °C to +55 °C				
	Temperature influence	< 0.1 % at 10 K				
	Auxiliary voltage inf uence	no				
	Load influence	no				
	External magnetic f eld inf uence	no (400 A/m)				
	Residual ripple	< 30 mVss				
	Response time	< 400 ms				
	Open-circuit voltage	max. 24 V				
	Current limiting	max. 2-fold in case of overload				
	Test voltage	4 kV between input, output, auxiliary voltage				
Auxiliary voltage (with "live zero" only)		230 V AC ± 20 %, 45 - 65 Hz, 2.5 VA				
	Options	● 110 V AC ± 20 %, 45 - 65 Hz, 2.5 VA				
		● 24 V DC - 15 % to + 25 %, 2 W				
		● 6-30 V AC + DC, 2 VA				
		● 36-265 V AC + DC, 2 VA				
Dimensions	Housing	Housing A, (22.5 mm wide) Page A1				
	Through hole	8.5 mm at 50 A and 60 A				
		15 mm at 100 A and 150 A				
Weight		190 g				
Installation	Fastening	Snap-on fastening on top hat rail 35 mm accord. to DIN EN 60 715				
	Electrical connection	Screw terminal max. 4 mm²				

Measuring transducer for alternating current (AC)

(sinusoidal)

at current transformer and direct measurement

1 A or 5 A or 10 A

Type:

MA-1.1s

Application

The measuring transducer MA-1.1s is used for the direct transformation and isolation of a sinusoidal alternating current into an impressed direct current and/or direct voltage signal. For types with double output, these outputs are switchable between 0-20 mA and 0-10 V or 4-20 mA and 2-10 V.

Function

The alternating current to be measured is transmitted to the downstream rectifier circuit via an internal current transformer serving for galvanic isolation. The direct voltage generated there is amplified and transformed into an impressed direct current or in an impressed direct voltage. The output is no-load proof and short-circuit proof.
Only for „live zero" or double output, an auxiliary voltage is required. Connecting the two outputs is not permissible.

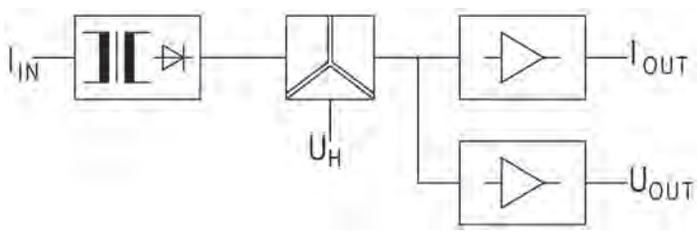

Connection

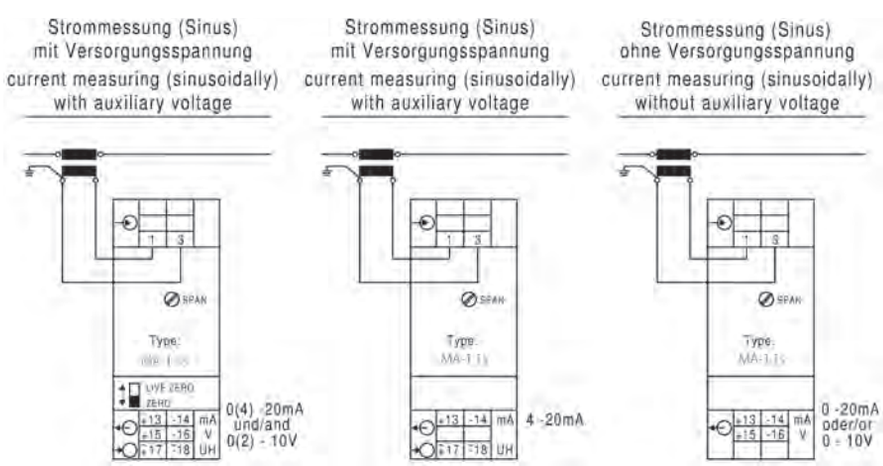

Technical data

Input	Input variable	sinusoidal alternating current
	Rated values	0-1 A or 0-5 A or 0-10 A
	Rated frequency	50 Hz, 60 Hz or 400 Hz
	Energy consumption	1 VA, with "live zero" 0.3 VA
	Overload permanent	2-fold
	High surge load	20-fold, 1 s
Output	Output variables	Single output or double output
	Rated values	0-20 mA / 500 ˙ load or
		0-10 V / max. load 10 mA
	Option	● "live zero" 4-20 mA / 500 ˙ load
		(auxiliary voltage required)
		● 0-20 mA / 500 ˙ load and 0-10 V / max. load 10 mA as well as
		4-20 mA / 500 ˙ load and 2-10 V / max. load 10 mA
		Switchable on the front side
		(auxiliary voltage required)
Transfer behavior	Accuracy	± 0.5 % at 5-100 % of rated value
		(with auxiliary voltage 0-100 % of rated value)
	Frequency inf uence	< 0.05 % with 10 Hz frequency change
	Temperature range	- 15 °C to +20 °C to +30 °C to +55 °C
	Temperature inf uence	< 0.1 % at 10 K
	Auxiliary voltage influence	no
	Load inf uence	no
	External magnetic field influence	no (400 A/m)
	Residual ripple	< 40 mVss
	Response time	< 400 ms
	Open-circuit voltage	max. 24 V
	Current limiting	max. 2-fold in case of overload
	Test voltage	4 kV between input, output, auxiliary voltage
Auxiliary voltage (with „live zero“ and double output only)		230 V AC ± 20 %, 45-65 Hz, 2.5 VA
	Options	● 110 V AC ± 20 %, 45 - 65 Hz, 2.5 VA
		● 24 V DC - 15 % to + 25 %, 2 W
		● 6-30 V AC + DC, 2 VA
		● 36-265 V AC + DC, 2 VA
Dimensions	Housing	Housing A, (22.5 mm wide) Page A1
Weight		190 g
Installation	Fastening	Snap-on fastening on top hat rail 35 mm accord. to DIN EN 60 715
	Electrical connection	Screw terminal max. 4 mm²

Measuring transducer for alternating voltage

(sinusoidal)

Type:

MV-1.1s

Application

The measuring transducer MV-1.1s is used for the transformation and isolation of a sinusoidal alternating voltage into an impressed direct current and/or direct voltage signal. For types with double output, these outputs are switchable between 0-20 mA and 0-10 V or 4-20 mA and 2-10 V.

Function

The alternating voltage to be measured is transmitted to the downstream rectifier circuit via an internal voltage transformer serving for galvanic isolation. The direct voltage generated there is amplified and transformed into an impressed direct current or in an impressed direct voltage. The output is no-load proof and short-circuit proof.
Only for „live zero" or double output, an auxiliary voltage is required. Connecting the two outputs is not permissible.

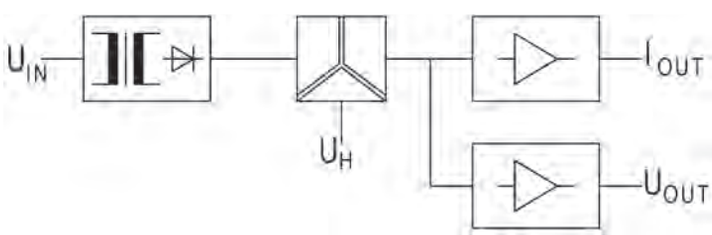

Connection

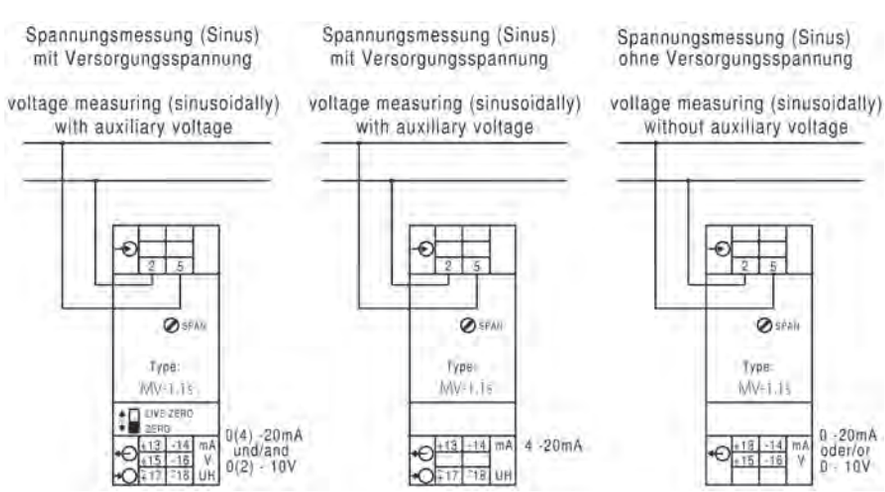

Technical data

Input	Input variable	Sinusoidal alternating voltage
	Rated values	0-100 V, 0-250 V, 0-500 V and 0-600 V
		(0-750 V in grounded installations)
	Rated frequency	50 Hz, 60 Hz or 400 Hz
	Energy consumption	2-5 VA, with „live zero“ 0.3-2 VA
	Overload permanent	1.2-fold
	High surge load	2-fold, 1 s
Output	Output variables	Single output or double output
	Rated values	0-20 mA / 500 ˙ load or
		0-10 V / max. load 10 mA
	Option	● "live zero" 4-20 mA / 500 ˙ load
		(auxiliary voltage required)
		● 0-20 mA / 500 ˙ load and 0-10 V / max. load 10 mA as well as
		4-20 mA / 500 ˙ load and 2-10 V / max. load 10 mA
		Switchable on the front side
		(auxiliary voltage required)
Transfer behavior	Accuracy	± 0.5 % at 10-100 % of rated value
		(with auxiliary voltage 0-100 % of rated value)
	Frequency inf uence	< 0.05 % with 10 Hz frequency change
	Temperature range	- 15 °C to +20 °C to +30 °C to +55 °C
	Temperature inf uence	< 0.1 % at 10 K
	Auxiliary voltage influence	no
	Load inf uence	no
	External magnetic field influence	no (400 A/m)
	Residual ripple	< 30 mVss
	Response time	< 400 ms
	Open-circuit voltage	max. 24 V
	Current limiting	max. 2-fold in case of overload
	Test voltage	< 500 V: 4 kV between input, output, auxiliary voltage
		> 500 V: 5.2 kV between input and output
		4 kV input / output to auxiliary voltage
Auxiliary voltage (with „live zero“ and double output and voltages > 500 V only)		230 V AC ± 20 %, 45-65 Hz, 2.5 VA
	Options	● 110 V AC ± 20 %, 45-65 Hz, 2.5 VA
		● 24 V DC - 15 % to + 25 %, 2 W
		● 6-30 V AC + DC, 2 VA
		● 36-265 V AC + DC, 2 VA
Dimensions	Housing	Housing A, (22.5 mm wide) Page A1
Weight		190 g
Installation	Fastening	Snap-on fastening on top hat rail 35 mm accord. to DIN EN 60715
	Electrical connection	Screw terminal max. 4 mm²

Measuring transducer for current and voltage

True RMS

Type:

MA-1.1s (eff)

MV-1.1s (eff)

Application

The measuring transducers MA-1.1s (eff) and MV-1.1s (eff) are used for the transformation and isolation of a current or a voltage of arbitray waveform into an impressed direct current and direct voltage signal. The calibrated double outputs are switchable between 0-20 mA and 0-10 V or 4-20 mA and 2-10 V.

Function

The measurand is transmitted to the rms rectifier via an input protective circuit and a filter. Crest factors (ratio between peak value and rms value) up to a value of 4 may be processed without problems. The direct voltage thus generated is galvanically isolated from the output by an optocoupler. An downstream amplifier effectuates the direct current and direct voltage impression. Both outputs are no-load proof and short-circuit proof. Connecting the two outputs is not permissible. An auxiliary voltage is required.

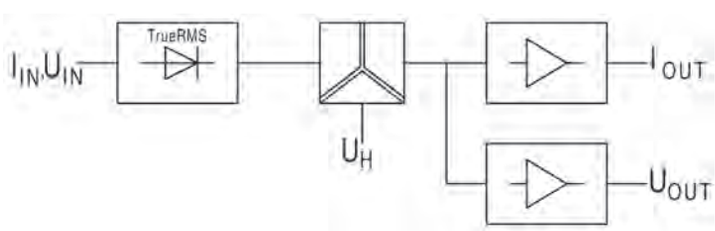

Connection

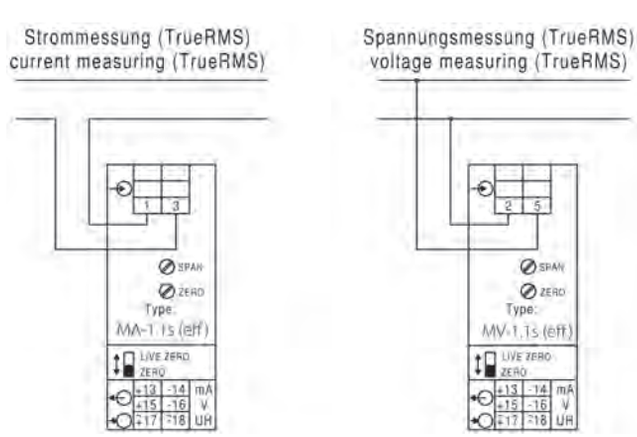

Technical data

Input	Input variable	direct and alternating current of arbitrary waveform (True RMS)
	Rated values	● a value from 0-1 mA to 0-5 A, voltage drop 60 mV
		● a value from 0-60 mV to 0-600 V,
		R_i = 100 k ˙ t o 1 V, > 1 V 100 k ˙ /V , however max. 2 M ˙
	Rated frequency	DC / 40-200 Hz
	Option	● DC / 40-1000 Hz (other values on request)
	Overload permanent	Current: 2-fold
		Voltage: 5-fold / max. 830 V
	High surge load	Current: 20-fold, 1 s
Output	Output variables	Double output
	Rated values	0-20 mA / 500 ˙ load and 0-10 V / max. load 10 mA
		as well as 4-20 mA / 500 ˙ load and 2-10 V / max. load 10 mA
		switchable on the front side
Transmission behavior	Accuracy	± 0.5 %
	Crest factor	4 with 0.5 % error
	Frequency inf uence	< 0.5 % with DC / 40-200 Hz
	Temperature range	- 15 °C to +20 °C to +30 °C to +55 °C
	Temperature inf uence	< 0.2 % at 10 K
	Auxiliary voltage influence	no
	Load inf uence	no
	External magnetic field influence	no (400 A/m)
	Residual ripple	< 30 mVss
	Response time	< 300 ms
	Open-circuit voltage	max. 24 V
	Current limiting	max. 2-fold in case of overload
	Test voltage	< 500 V: 4 kV between input, output, auxiliary voltage
		> 500 V: 5.2 kV between input and output
		4 kV input / output to auxiliary voltage
Auxiliary voltage		230 V AC ± 20 %, 45 - 65 Hz, 2.5 VA
	Options	● 110 V AC ± 20 %, 45 - 65 Hz, 2.5 VA
		● 24 V DC - 15 % to + 25 %, 2 W
		● 6-30 V AC + DC, 2 VA
		● 36-265 V AC + DC, 2 VA
Dimensions	Housing	Housing A, (22.5 mm wide) Page A1
Weight		170 g
Installation	Fastening	Snap-on fastening on top hat rail 35 mm accord. to DIN EN 60 715
	Electrical connection	Screw terminal max. 4 mm²

Measuring transducer for current and voltage (True RMS) for installations up to 1000 V (CAT III)

Type:

MA-1.1s (eff) T

MV-1.1s (eff) T

Application

The measuring transducers MA-1.1s (eff) T and MV-1.1s (eff) T are used for the transformation and isolation of a current or a voltage into an impressed direct current and direct voltage signal. An integrated limit monitoring serves for monitoring the input signal.

Function

The measurand is transmitted to the rms rectifier via an input protective circuit. Crest factors (ratio between peak value and rms value) up to a value of 4 may be processed without problems. The direct voltage thus generated is galvanically isolated from the output by an optocoupler. An downstream amplifier effectuates the direct current and direct voltage impression. Both outputs are no-load proof and short-circuit proof. Connecting the two outputs is not permissible. The limit value may be adjusted within a range of 0-120 % of the input signal. Exceeding the limit value is indicated by an LED. An auxiliary voltage is required.

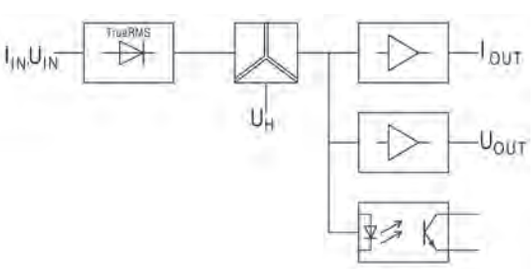

Connection

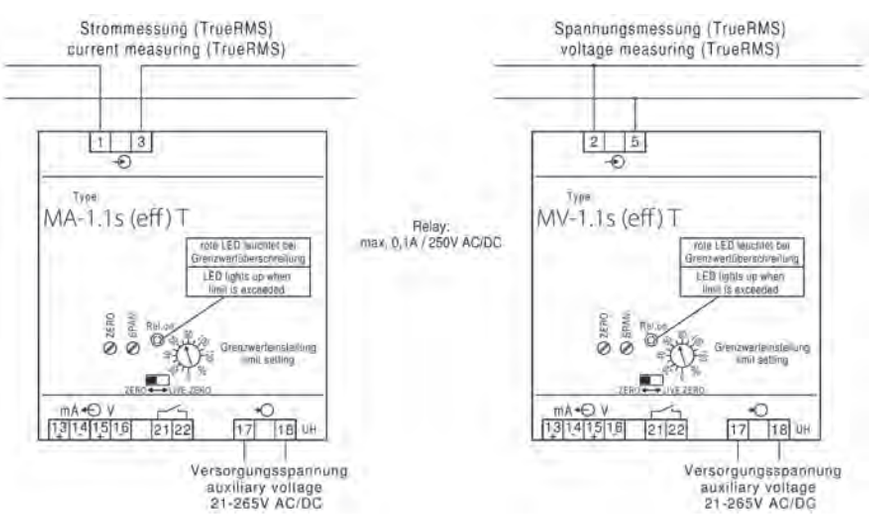

Technical data

Input	Input variable	Direct and alternating voltage / direct and alternating current of arbitrary waveform
	Rated values	MA-1.1s (e˜) T a value from 0-1 mA to 0-5 A, voltage drop 60 mV
		MV-1.1s (e˜) T a value from 0-1000 V, Ri = 2 M ˙
	Rated frequency	DC/40-200 Hz
	Option	● DC/40-1000 Hz
	Overload permanent	for current 2-fold, for voltage 5-fold / max. 2000 V
	High surge load	for current 20-fold, 1 s
Output	Output variable	Double output
	Rated values	0-20 mA / 0-500 ˙ load and 0-10 V, max. load 10mA as well as
		4-20 mA / 0-500 ˙ load and 2-10 V max. load 10 mA, switchable on the front side
	Limit value output	1 NO contact, hysteresis approx. 4 % of limit value, contact load max. 0.1 A / 250 V AC/DC
	Function indicator	red LED if limit value is exceeded
Transmission behavior	Accuracy	+/-0.5 %
	Crest factor	4 with max. error of 0.5 %
	Frequency inf uence	< 0.5 % with DC / 40–200 Hz
	Temperature range	-15°C to +20°C to +30°C to +55 °C
	Temperature inf uence	< 0.2 % at 10 K
	Auxiliary voltage influence	no
	Load inf uence	no
	External magnetic field influence	no (to 400 A/m)
	Residual ripple	< 50 mVss
	Response time	< 300 ms
	Open-circuit voltage	max. 24 V
	Current limiting	max. 2-fold in case of overload
	Test voltages	7.4 kV between input to output, input to auxiliary voltage and input to relay contacts
		4 kV between output to auxiliary voltage and to relay contacts
Standards	EMC	DIN EN 61326
	Mechanical strength	DIN EN 61010 Part 1
	Electrical safety	DIN EN 61010 Part 1
		Housing insulated, protection class II
		for working voltages up to 1000V (phase to neutral)
		pollution level 2, Measuring category CAT III
	Accuracy, overload	DIN EN 60688
	Air and creep distances	DIN EN 61010 Part 1
	IP code	DIN EN 60529 Housing IP30, terminals IP20
	Connection	DIN 43807
Auxiliary voltage		21-265 VAC + DC, 2 VA
Weight		220 g

Dimensions

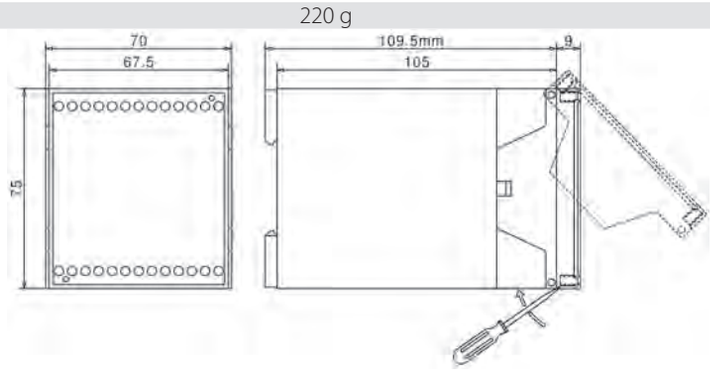

Installation	Fastening	Snap-on fastening on top hat rail 35 mm accord. to DIN EN 60 715
	Electrical connection	Screw terminal max. 4 mm²

Measuring transducer for frequency

Type:

MF-1.1

Application

The measuring transducer MF-1.1 is used for the transformation and isolation of a frequency into an impressed direct current and direct voltage signal. Alternating voltages and pulsed direct voltages may be processed.

Function

The frequency to be measured is sent to a filter via an internal voltage transformer serving for galvanic isolation and from there to a microcontroller for evaluation. The direct voltage generated there is transformed into an impressed direct current and in an impressed direct voltage. Both outputs are no-load proof and short-circuit proof. Connecting the two outputs is not permissible. An auxiliary voltage is required in case of "live zero" as well as in case of signifcantly fluctuating rated voltage and frequency ranges with reference to zero.

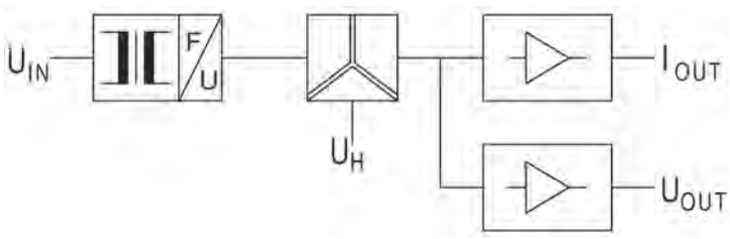

Connection

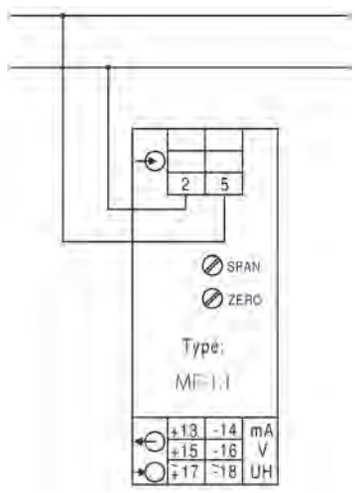

Technical data

Input	Input variable	Frequency
	Rated values	45-55 Hz, 48-52 Hz, 55-65 Hz, 58-62 Hz,
		360-440 Hz, 380-420 Hz, 0-100 Hz, 0-500 Hz or 0-1000 Hz
		(with separated auxiliary voltage only)
	Rated voltage	100 V, 110 V, 230 V, 400 V or 500 V ± 20 %
		2-50 V, 25-250 V, 50-500 V or 75-690 V
		(with separated auxiliary voltage only)
	Energy consumption	2.5-5 VA, 1-1.5 VA with separated auxiliary voltage
	Overload permanent	1.2-fold
	High surge load	2-fold, 1 s
Output	Output variables	Double output
	Rated values	0-20 mA / 500 ˙ load and 0-10 V / max. load 10 mA
	Option	● "live zero" 4-20 mA / 500 ˙ load and 2-10 V / max.
		load 10 mA (auxiliary voltage required)
Transmission behavior	Accuracy	± 0.5 %
	Temperature range	- 15 °C to +20 °C to +30 °C to +55 °C
	Temperature inf uence	< 0.1 % at 10 K
	Auxiliary voltage influence	no
	Load inf uence	no
	External magnetic field influence	no (400 A/m)
	Residual ripple	< 30 mVss
	Response time	< 300 ms
	Open-circuit voltage	max. 24 V
	Current limiting	max. 2-fold in case of overload
	Test voltage	< 500 V: 4 kV between input, output, auxiliary voltage
		> 500 V: 5.2 kV between input and output
		4 kV input / output to auxiliary voltage
Auxiliary voltage (with „live zero" only, nominal values from 0 - ... Hz and voltage ranges)		230 V AC ± 20 %, 45-65 Hz, 2.5 VA
	Option	● 110 V AC ± 20 %, 45-65 Hz, 2.5 VA
		● 24 V DC - 15 % to + 25 %, 2 W
		● 6-30 V AC + DC, 2 VA
		● 36-265 V AC + DC, 2 VA
Dimensions	Housing	Housing A, (22.5 mm wide) Page A1
Weight		190 g
Installation	Fastening	Snap-on fastening on top hat rail 35 mm accord. to DIN EN 60 715
	Electrical connection	Screw terminal max. 4 mm²

Measuring transducer for phase angle

Power factor

Type:

MPlz.1

Application

The measuring transducer MPlz.1 is used for the transformation and isolation of the phase angle between current and voltage of an alternating current and three-phase power system of the same load into an impressed direct current and direct voltage signal.

Function

The parameters to be measured are transmitted to the zero point comparator via internal current transformers and voltage dividers. At the comparator, a square-wave signal is available which is directly related to the phase angle. A downstream integration stage then generates the direct voltage mean value. This direct voltage is transformed into an impressed direct current and an impressed direct voltage. The galvanic isolation between input and output signals is done using optocoupler. Both outputs are no-load proof and short-circuit proof. Connecting the two outputs is not permissible. An auxiliary voltage is required.

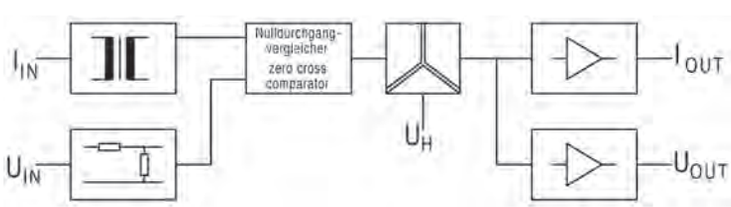

Connection

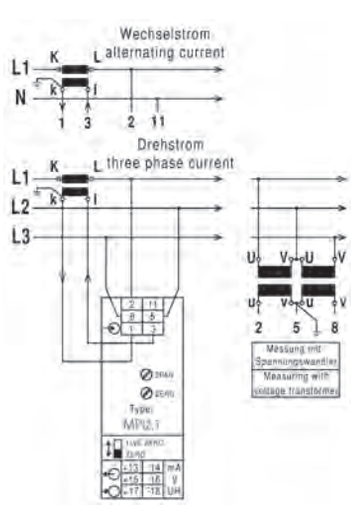

Technical data

Input	Input variable	Phase angle between sinusoidal voltages and currents
		in alternating current and three-phase power systems with auxiliary voltage
	Rated values	- 60° - 0 - + 60°, electrical cos φ 0.5 cap-1- 0.5 ind or
		- 45.6° - 0 - + 72.5°, electrical cos φ 0.7 cap-1-0.3 ind
	Option	● Type ...4Q: 4-quadrant operation 1-0-1-0-1
	Rated voltage	100 V, 110 V, 230 V, 400 V, 500 V, 600 V (690 V in grounded installations)
		± 20 %, max. 2.5 VA
	Rated current	1 A or 5 A, 0.3 VA
	Rated frequency	50 Hz, 60 Hz or 400 Hz
	Overload permanent	Current: 2-fold
		Voltage: 1.2-fold
	High surge load	Current: 20-fold, 1 s
		Voltage: 2-fold, 1 s
Output	Output variables	Double output
	Rated values	0-20 mA / 500 ˙ load and 0-10 V / max. load 10 mA
		as well as 4-20 mA / 500 ˙ load and 2-10 V / max. load 10 mA
		switchable on the front side
Transmission behavior	Accuracy	± 0.5 % linear to the angular degrees
	Current range	4-200 % of rated current
	Current inf uence	< 0.5 % with 0.15- to 2-fold rated current
	Voltage influence	< 0.1 % with ± 20 % of rated voltage
	Frequency inf uence	< 0.1 % with 10 Hz frequency change
	Temperature range	- 15 °C to +20 °C to +30 °C to +55 °C
	Temperature inf uence	< 0.2 % at 10 K
	Auxiliary voltage influence	no
	Load inf uence	no
	External magnetic field influence	no (400 A/m)
	Residual ripple	< 30 mVss
	Response time	< 400 ms
	Open-circuit voltage	max. 24 V
	Current limiting	max. 2-fold in case of overload
	Test voltage	4 kV between input, output, auxiliary voltage
Auxiliary voltage		230 V AC ± 20 %, 45-65 Hz, 2.5 VA
	Options	● 110 V AC ± 20 %, 45-65 Hz, 2.5 VA
		● 24 V DC - 15 % to + 25 %, 2 W
		● 6-30 V AC + DC, 2 VA
		● 36-265 V AC + DC, 2 VA
Dimensions	Housing	Housing A, (22.5 mm wide) Page A1
Weight		200 g
Installation	Fastening	Snap-on fastening on top hat rail 35 mm accord. to DIN EN 60 715
	Electrical connection	Screw terminal max. 4 mm²

Measuring transducer for active power

Active power transducer - Finding the right type

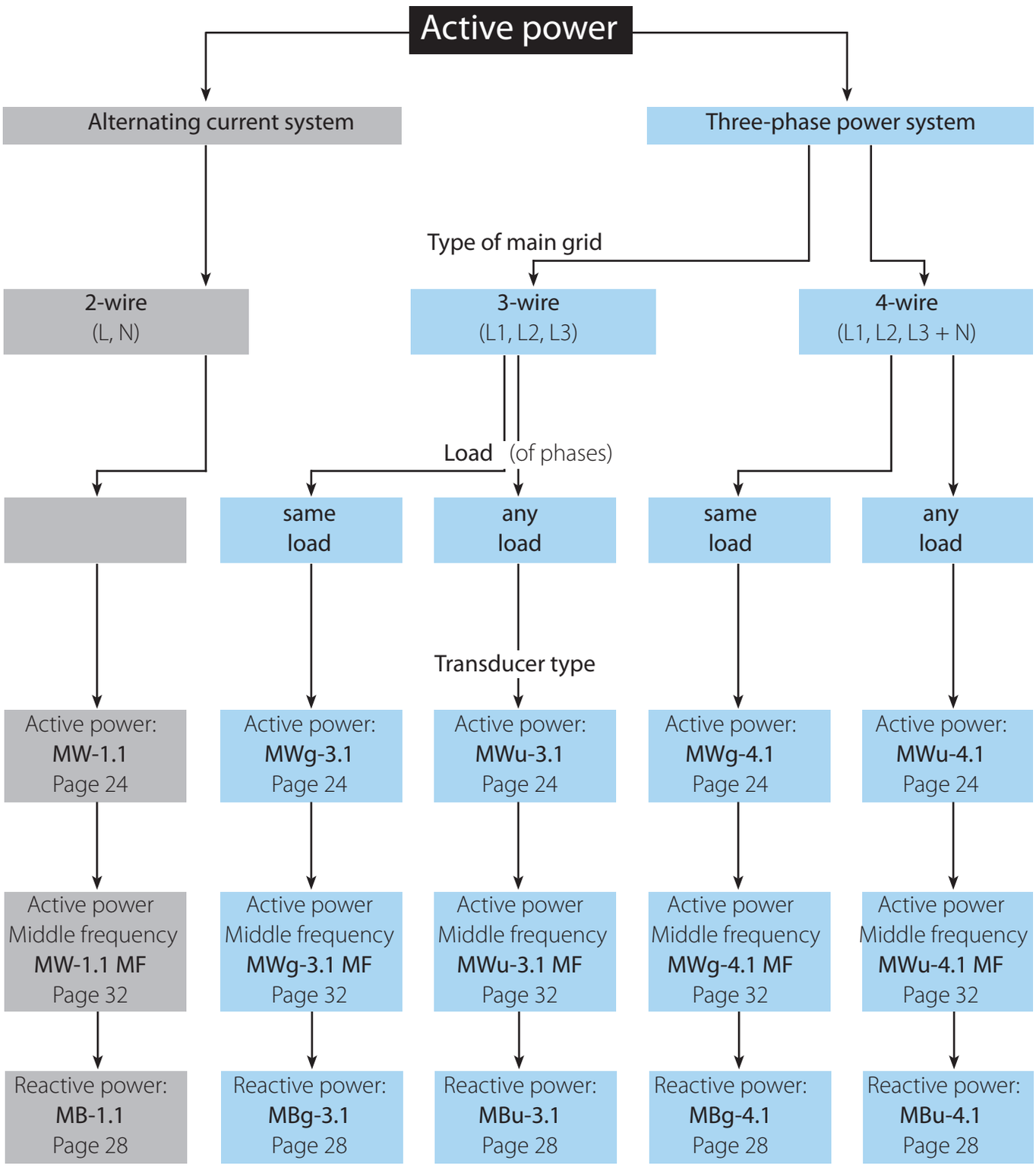

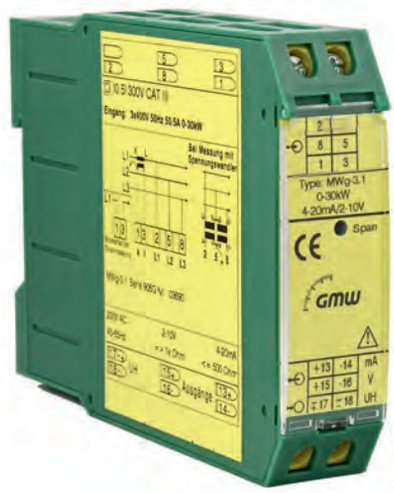

Measuring transducers for active power

Alternating current and three-phase current

Type:

MW-1.1

MWg-3.1

MWg-4.1

MWu-3.1

MWu-4.1

Application

The measuring transducers MW-1.1, MWg-3.1, MWg-4.1, MWu3-1 and MWu-4.1 are used for the transformation and isolation of the active power in alternating current or three-phase power systems into an impressed direct current and direct voltage signal.

Function

The parameters to be measured are transmitted to the analog multiplier via internal current transformers and voltage dividers. The instantaneous values of current and voltage are then multiplied and formed as the mean value of a direct voltage matching the active power in a downstream integration stage. Sinusoidal and non-sinusoidal alternating current parameters of any waveform may be measured. The galvanic isolation between input and output signals is done using optocoupler. An downstream amplifier supplies the impressed direct current and direct voltage signals. Both outputs are no-load proof and short-circuit proof. Connecting the two outputs is not permissible. An auxiliary voltage is required for „live zero" or rated voltage flucuations >± 20%.

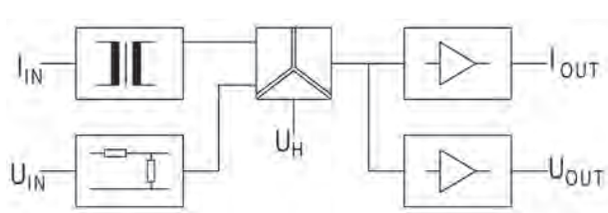

Connection

Type MW-1.1 Alternating current
Working voltage up to 300 V (phase to neutral L - N)

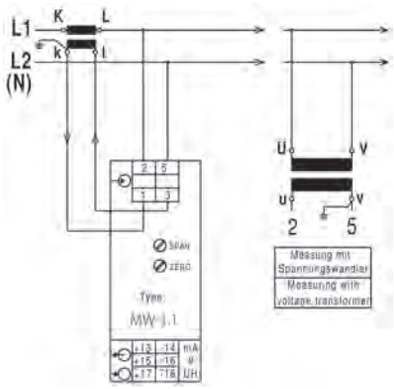

Working voltage up to 600 V (phase to neutral L - N)

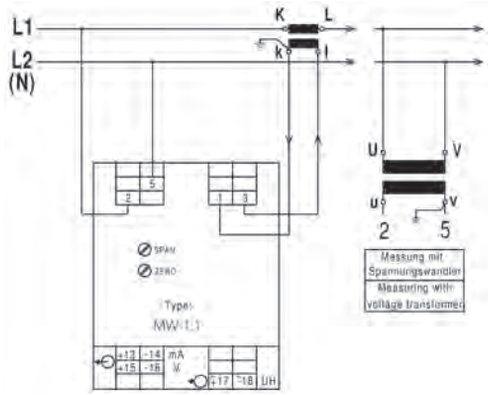

Type MWg-4.1 (Four-wire three-phase current, same load)
Working voltage up to 300 V (phase to neutral L - N)

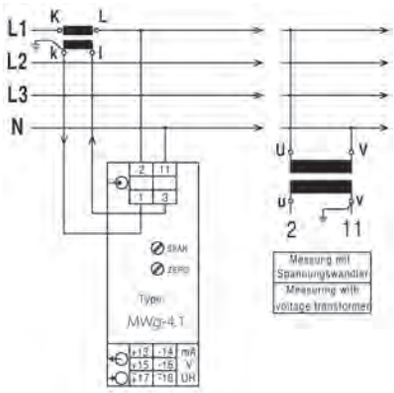

Working voltage up to 600 V (phase to neutral L - N)

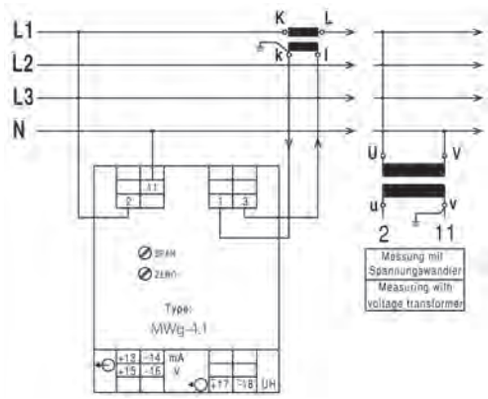

For devices with frequency module, further outputs are not available. At Terminals +13 and -14, the frequency output is available.

Type MWg-3.1 (Three-wire three-phase current, same load)
Working voltage up to 300 V (phase to neutral L - N)

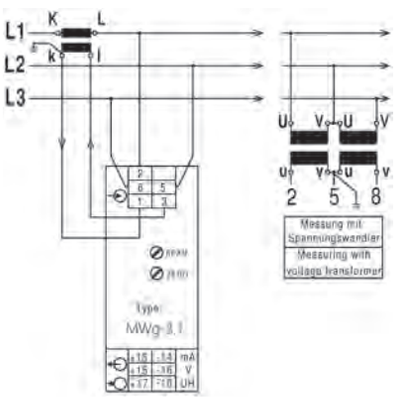

Working voltage up to 600 V (phase to neutral L - N)

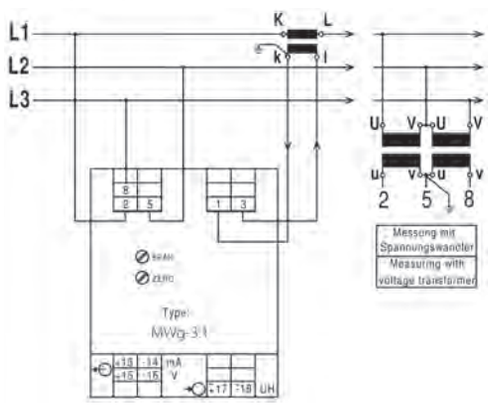

Type MWu-3.1 (Three-wire three-phase current, any load)
Working voltage up to 600 V (phase to neutral L - N)

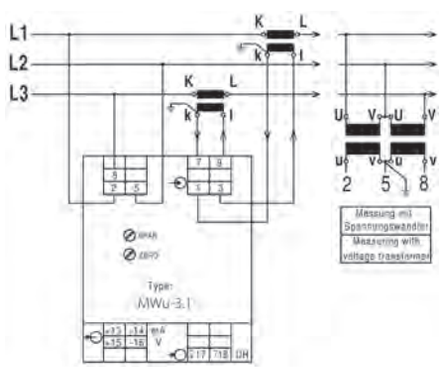

Type MWu-4.1 (Four-wire three-phase current, any load)
Working voltage up to 600 V (phase to neutral L - N)

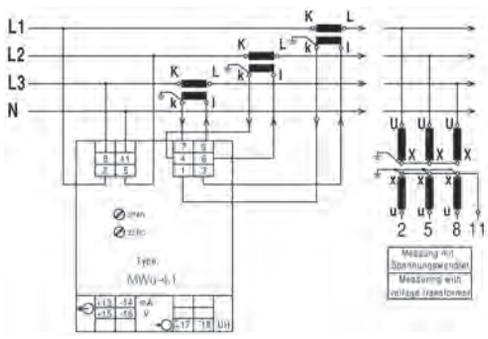

Technical data

Input	Input variable	Active power for alternating and three-phase current
	Rated values	50-150 % of apparent power
		with alternating current: S = U x I
		with three-phase current: S = U x I x 1.732
	Rated voltage	100 V, 110 V, 230 V, 400 V, 500 V or 600 V (690 V in grounded installations)
		± 20 %, max. 3.5 VA
	Rated current	1 A oder 5 A, 0.3 VA
	Rated frequency	50 Hz, 60 Hz or 400 Hz
	Overload permanent	Current: 2-fold
		Voltage: 1.2-fold
	High surge load	Current: 20-fold, 1 s
		Voltage: 2-fold, 1 s
Output	Output variables	Double output
	Rated values	0-20 mA / 500 ˙ load and 0-10 V / max. load 10 mA
	Option	● "live zero" 4-20 mA / 500 ˙ load and 2-10 V
		max. load 10 mA (auxiliary voltage required)
	Bipolar output	● e.g. - 20 - 0 - + 20 mA / 500 ˙ load and
		- 10 - 0 - + 10 V / max. load 10 mA
	Zero point rise	● e.g. 0-10-20 mA / 500 ˙ load and
		0-5-10 V / max. load 10 mA
Transmission behavior	Accuracy	± 0.5 %
	Voltage influence	< 0.1 % with ± 10 % of rated voltage
	Frequency inf uence	< 0.3 % with 10 Hz frequency change
	Phase angle influence	< 0.5 % for ± 90 °
	Temperature range	-15 °C to +20 °C to +30 °C to +55 °C
	Temperature influence	< 0.3 % at 10 K
	Auxiliary voltage inf uence	no
	Load influence	no
	External magnetic f eld inf uence	no (400 A/m)
	Residual ripple	< 30 mVss
	Response time	< 300 ms
	Open-circuit voltage	max. 24 V
	Current limiting	max. 2-fold in case of overload
	Test voltage	< 500 V: 4 kV between input, output, auxiliary voltage
		> 500 V: 5.2 kV between input and output
		4 kV input / output to auxiliary voltage
Auxiliary voltage (with „live zero" or in case of rated voltage fluctuation or voltages > 500 V)		230 V AC ± 20 %, 45-65 Hz, 2.5 VA
	Options	● 110 V AC ± 20 %, 45-65 Hz, 2.5 VA
		● 24 V DC - 15 % to + 25 %, 2 W
		● 6-30 V AC + DC, 2 VA
		● 36-265 V AC + DC, 2 VA
Dimensions	Housing	< 500 V: MW-1.1, MWg-4.1, MWg-3.1: Housing A, (22.5 mm wide) Page A1
		> 500 V: MW-1.1, MWg-4.1, MWg-3.1: Housing B, (45 mm wide) Page A1
		MWu-3.1, MWu-4.1 : Housing B, (45 mm wide) Page A1
Weight		MW-1.1, MWg-4.1, MWg-3.1: 250 g
		MWu-3.1: 340 g
		MWu-4.1: 370 g
Installation	Fastening	Snap-on fastening on top hat rail 35 mm accord. to DIN EN 60 715
	Electrical connection	Screw terminal max. 4 mm²

Measuring transducer for reactive power

Alternating current and three-phase current

Type:

MB-1.1

MBg-3.1

MBg-4.1

MBu-3.1

MBu-4.1

Application

The measuring transducers MB-1.1, MBg-4.1, MBg-3.1 , MBu-3.1 and MBu-4.1 are used for the transformation and isolation of the reactive power in alternating current or three-phase power systems into an impressed direct current and direct voltage signal.

Function

The parameters to be measured are transmitted to the analog multiplier via internal current transformers and voltage dividers. The instantaneous values of current and voltage are then multiplied and formed as the mean value of a direct voltage matching the reactive power in a downstream integration stage. Sinusoidal and non-sinusoidal alternating current parameters of any waveform may be measured. The galvanic isolation between input and output signals is done using optocoupler. An downstream amplifier supplies the impressed the direct current and direct voltage signals. Both outputs are no-load proof and short-circuit proof. Connecting the two outputs is not permissible. An auxiliary voltage is required for „live zero" or rated voltage flucuations >± 20%.

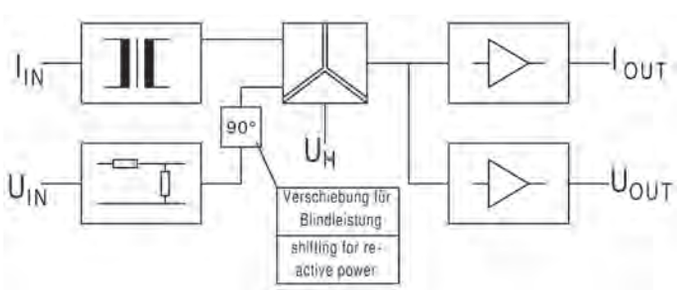

Connection

Type MB-1.1 Alternating current

Working voltage up to 300 V (phase to neutral L - N)

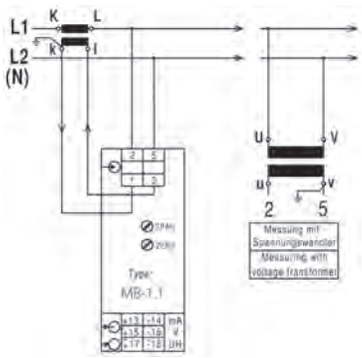

Working voltage up to 600 V (phase to neutral L - N)

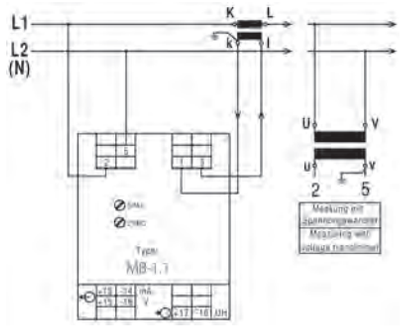

Type MBg-4.1 (Four-wire three-phase current, same load)

Working voltage up to 300 V (phase to neutral L - N)

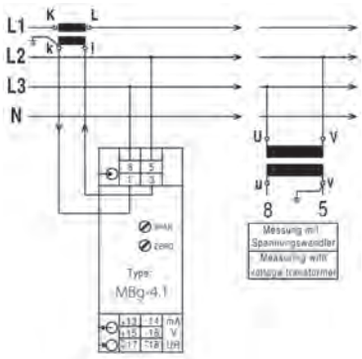

Working voltage up to 600 V (phase to neutral L - N)

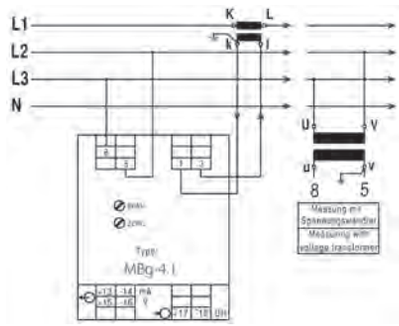

Type MBg-3.1 (Three-wire three-phase current, same load)

Working voltage up to 300 V (phase to neutral L - N)

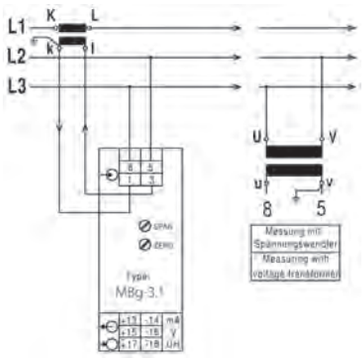

Working voltage up to 600 V (phase to neutral L - N)

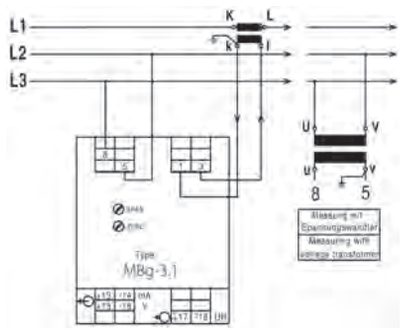

For devices with frequency module, further outputs are not available. At Terminals +13 and -14, the frequency output is available.

Type MBu-3.1 (Three-wire three-phase current, any load)

Working voltage up to 600 V (phase to neutral L - N)

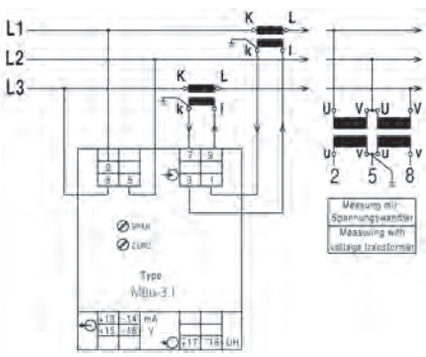

Type MBu-4.1 (Four-wire three-phase current, any load)

Working voltage up to 600 V (phase to neutral L - N)

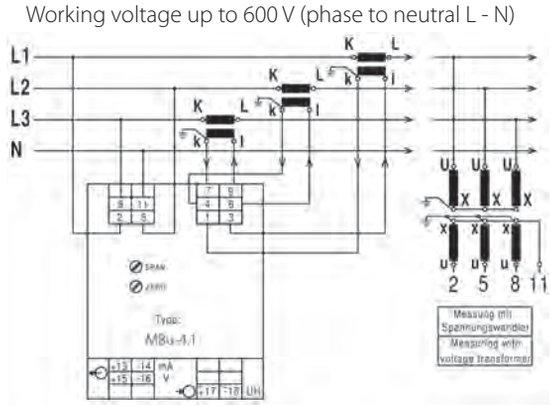

Technical data

Input	Input variable	Reactive power for alternating and three-phase current
	Rated values	50-150 % of apparent power
		with alternating current: S = U x I
		with three-phase current: S = U x I x 1.732
	Rated voltage	100 V, 110 V, 230 V, 400 V, 500 V or 600 V (690 V in grounded installations)
		± 20 %, max. 3.5 VA
	Rated current	1 A or 5 A, 0.3 VA
	Rated frequency	50 Hz, 60 Hz or 400 Hz
	Overload permanent	Current: 2-fold
		Voltage: 1.2-fold
	High surge load	Current: 20-fold, 1 s
		Voltage: 2-fold, 1 s
Output	Output variables	Double output
	Rated values	0-20 mA / 500 ˙ load and 0-10 V / max. load 10 mA
	Option	● "live zero" 4-20 mA / 500 ˙ load and 2-10 V / max. load 10 mA (auxiliary voltage required)
	Bipolar output	● e.g. - 20 - 0 - + 20 mA / 500 ˙ load and - 10 - 0 - + 10 V / max. load 10 mA
	Zero point rise	● e.g. 0-10-20 mA / 500 ˙ load and 0-5-10 V / max. load 10 mA
Transmission behavior	Accuracy	± 0.5 %
	Voltage influence	< 0.1 % with ± 10 % of rated voltage
	Frequency inf uence	< 0.3 % with 10 Hz frequency change
		except for PwB-MU and PdrB-MU < 0.5 % with 1 Hz frequency change
	Phase angle inf uence	< 0.5 % for ± 90 °
	Temperature range	- 15 °C to +20 °C to +30 °C to +55 °C
	Temperature inf uence	< 0.3 % at 10 K
	Auxiliary voltage influence	no
	Load inf uence	no
	External magnetic field influence	no (400 A/m)
	Residual ripple	< 30 mVss
	Response time	< 300 ms
	Open-circuit voltage	max. 24 V
	Current limiting	max. 2-fold in case of overload
	Test voltage	< 500 V: 4 kV between input, output, auxiliary voltage
		> 500 V: 5.2 kV between input and output
		4 kV input / output to auxiliary voltage
Auxiliary voltage (with „live zero" or in case of rated voltage fluctuation or voltages > 500 V)		230 V AC ± 20 %, 45-65 Hz, 2.5 VA
	Options	● 110 V AC ± 20 %, 45-65 Hz, 2.5 VA
		● 24 V DC - 15 % to + 25 %, 2 W
		● 6-30 V AC + DC, 2 VA
		● 36-265 V AC + DC, 2 VA
Dimensions	Housing ˝ 500 V: MB-1.1, MBg-4.1, MBg-3.1:	Housing A, (22.5 mm wide) Page A1
	> 500 V: MB-1.1, MBg-4.1, MBg-3.1:	Housing B, (45 mm wide) Page A1
	MBu-3.1, MBu-4.1:	Housing B, (45 mm wide) Page A1
Weight	MB-1.1, MBg-4.1, MBg-3.1:	250 g
	MBu-3.1:	340 g
	MBu-4.1:	370 g
Installation	Fastening	Snap-on fastening on top hat rail 35 mm accord. to DIN EN 60 715
	Electrical connection	Screw terminal max. 4 mm²

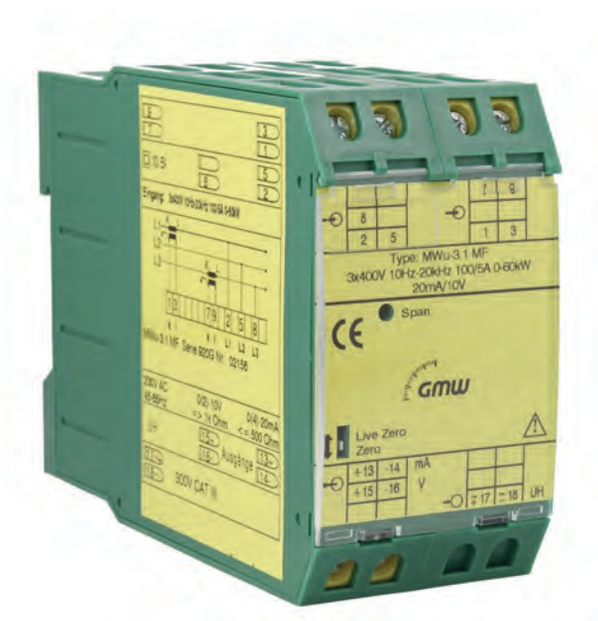

Measuring transducers for active power in the middle frequency range

Frequency range DC/10 Hz - 20 kHz

Measurement of direct, alternating, pulsed and mixed currents

Type:

MW-1.1 MF

MWg-4.1 MF

MWg-3.1 MF

MWu-3.1 MF

MWu-4.1 MF

Application

The measuring transducer MW-1.1 MF, MWg-4.1 MF; MWg-3.1 MF, MWu-3.1 MF and MWu-4.1 MF is used for the transformation and isolation of the active power in the middle frequency range into an impressed direct current and direct voltage signal. It is used in power supplies of welding systems, UPS systems, switch-mode power supplies, induction furnaces, systems with frequency converters, three-phase and servo drives, generators, and others.

Function

The parameters to be measured are transmitted to the analog multiplier via internal Hall effect current transformers and voltage dividers. The instantaneous values of current and voltage are then multiplied and formed as the mean value of a direct voltage matching the active power in a downstream integration stage. Alternating current parameters of any waveform may be measured. The galvanic isolation between input and output signals is done using optocoupler. An downstream amplifier supplies the impressed direct current and direct voltage signals. Both outputs are no-load proof and short-circuit proof. Connecting the two outputs is not permissible. An auxiliary voltage is required.

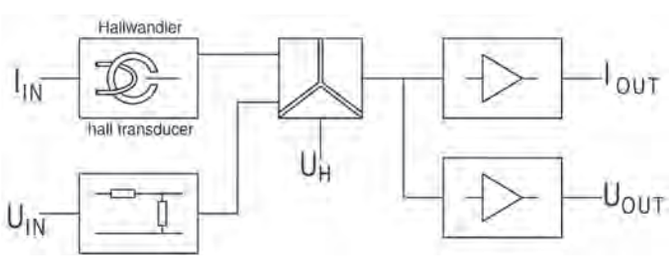

Connection

Type MW-1.1 MF (alternating current)

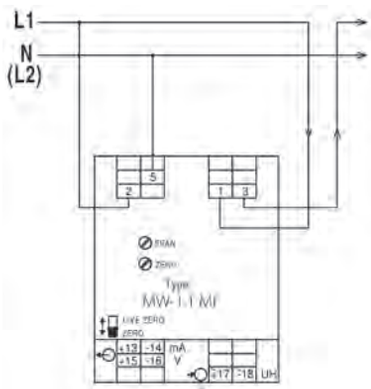

Type MWg-4.1 MF (four-wire three-phase current of same load)

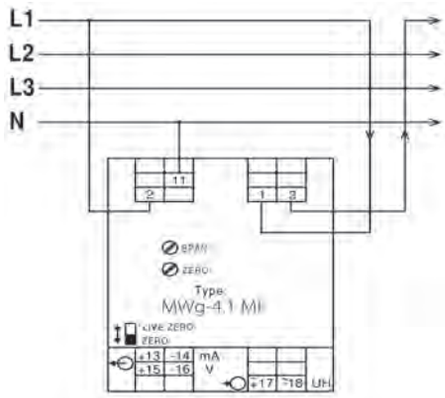

Type MWg-3.1 MF (three-wire three-phase current of same load)

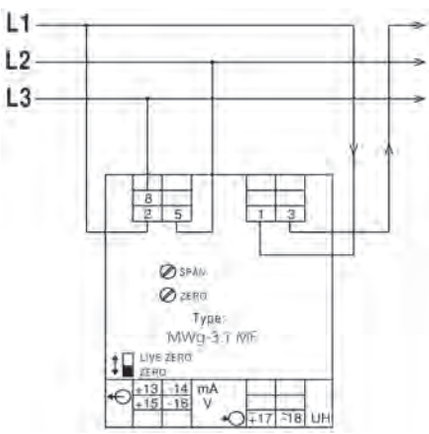

For devices with frequency module, further outputs are not available. At Terminals +13 and -14, the frequency output is available.

Type MWu-3.1 MF (three-wire three-phase current of any load)

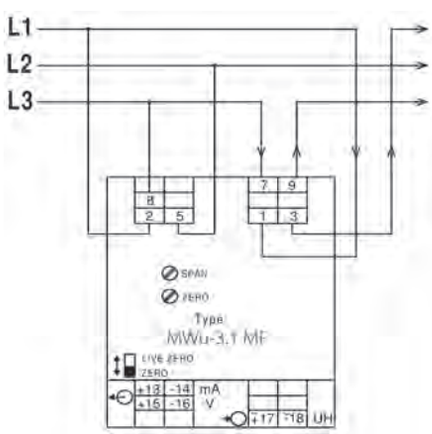

Type MWu-4.1 MF (four-wire three-phase current of any load)

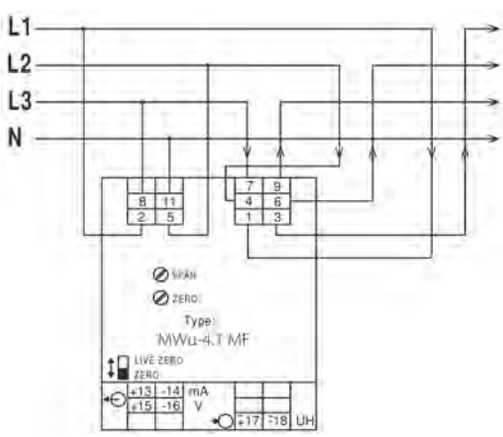

Technical data

Input	Input variable	Active power with alternating and three-phase current of same or any load unidirectional or bidirectional energy directions
	Nominal power	50-150 % of the apparent power for alternating current S = U x I, with three-phase current S = U x I x1.732
	Rated voltage	0-100 V, 110 V, 230 V, 400 V, 500 V or 600 V (690 V in grounded installations) max. 0.3 VA,
	Rated current	a value of 0-2 A to 0-15 A direct measurement, higher current values via indirect measurement using external current transformer (Hall e˜ ect or f exible current transformer)
	Frequency range	10 Hz – 20 kHz / DC
	Overload permanent	voltage 2-fold, current 2-fold (max. 20 A)
	High surge load	Voltage 2-fold 1 s, current 20-fold 1 s
Output	Output variable	Double output
	Rated values	0-20 mA / 0-500 ˙ load and 0-10 V, max. load 10 mA as well as 4-20 mA / 0-500 ˙ load and 2-10 V, max. load 10 mA, switchable on the front side
	Options	● bipolar output e.g. -20 – 0 - +20 mA/500 ˙ load and -10 – 0 – +10 V, max. load 10 mA ● Zero point rise e.g. 0-10-20 mA/500 ˙ load and 0-5-10 V max. load 10 mA ● Frequency module a value from 0-5 Hz to 0-10 kHz • „Open collector" NPN, max. load 30 V 100 mA, pulse/pause 50/50 % • Square-wave signal 5 V, max. load 10 mA, pulse/pause 50/50 %
Transmission behavior	Accuracy	± 0.5 %
	Voltage inf uence	< 0.5 % within rated voltage
	Frequency inf uence	< 3 % in frequency range of 10 Hz to 20 kHz or with DC
	Phase angle influence	< 0.5 % for ± 90° at 1000 Hz
	Temperature range	-15 °C to +20 °C to +30 °C to +55 °C
	Temperature influence	< 0.3 % at 10 K
	Auxiliary voltage inf uence	no
	Load influence	no
	External magnetic f eld inf uence	no (to 400 A/m)
	Residual ripple	< 40 mVss
	Response time	< 1 s
	Open-circuit voltage	max. 24 V
	Test voltage	4 kV between input, output, auxiliary voltage
Auxiliary voltage		230 V AC ± 20 %, 45-65 Hz, 3.5 VA
Dimensions		Housing B, 45 mm wide Page A1
Weight	MW-1.1 MF, MWg-.....MF	300 g
	MWu-3.1 MF	340 g
	MWU-4.1 MF	360 g
Installation	Fastening	Snap-on fastening on top hat rail 35 mm accord. to DIN EN 60 715
	Electrical connection	Screw terminal max. 4 mm^2

Universal measuring transducer with Ethernet interface

with HTTP, TCP/IP, Modbus-TCP protocol

with 4 bipolar configurable analog outputs,

2 limit value or pulsed output

Type:

Multi-E4-MU

Application

The measuring transducer Multi-E4-MU is used for the simultaneous transformation and isolation of current, voltage, frequency, active and reactive power, apparent power and the power factor for sinusoidal quantities into 4 impressed direct current and direct voltage signals. The measurement is possible in alternating current systems and 3-wire or 4-wire three-phase power systems with same or any load. The 29 measurands may be displayed, stored and configured via a 10 Mbit/sec Ethernet LAN interface at the PC. Up to 13000 series of measured values may be stored in the internal memory of the measuring transducer. Furthermore, the measuring results may be displayed via web browser or be read and further processed via HTTP, TCP/IP or Modbus-TCP protocol. Two further outputs may be used as limit value or pulsed outputs. The switching status of the limit value or pulsed outputs is indicated by 2 LEDs.

Function

The parameters to be measured are sent to a 22 bit A/D converter with a sample rate of >20 kSPS via current and voltage transformers and are then further transmitted to a microcontroller which calculates the required values for the outputs from the measured parameters. The output values for current and voltage are rms-values. The frequency is calculated from the period of the voltage signal of phase L1. The active powers are calculated from the products of the samples of current and voltage of the three phases. The calculations of the reactive power of the three phases are done using the product of the samples of the currents and the 90° offset voltage signals. The apparent power is the sum of the products from the three rms-values of current and voltage.
The power factors are calculated from the apparent power values and the active power values. The output amplifiers supply impressed direct current and direct voltage signals. The output signals are galvanically isolated from the input signals and the auxiliary voltage, but linked to each other via a common ground wire. The outputs are no-load proof and short-circuit proof. The two limit value and pulsed outputs are galvanically isolated from all inputs and outputs and the auxiliary voltage. An auxiliary voltage is required.

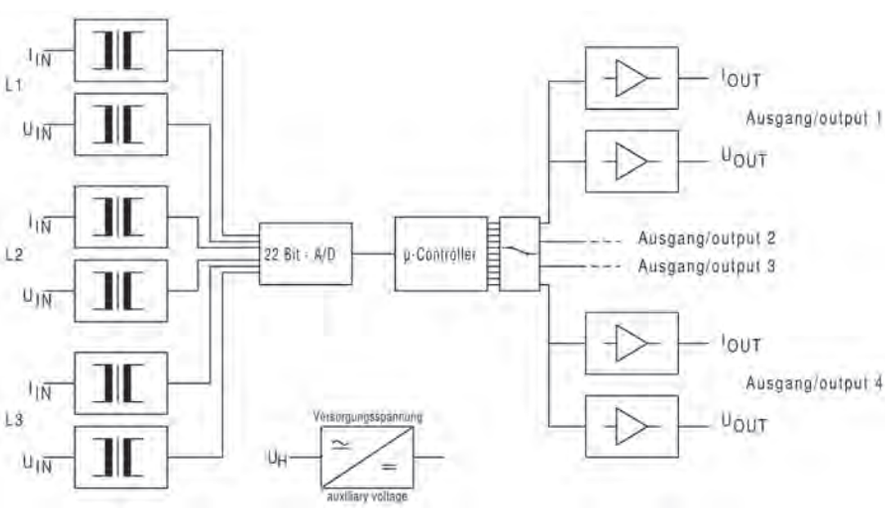

Technical data

Input	Input variable	Alternating current, alternating voltage, frequency, active power, reactive power, apparent power and power factor in alternating current systems, four-wire and three-wire three-phase power systems of same and any load, unidirectional or bidirectional energy direction, conf gurable
	Rated current	2 A and 6 A
	Current range	0.3-10 A, conf gurable
	Rated voltage	100-750 V
	Voltage range	40-750 V, conf gurable
	Rated frequency	50 Hz
	Frequency range	40-80 Hz
	Energy consumption	per current path 0.06 VA with 1A, 0.3 VA with 5 A per current path 0.02 VA with 100 V, 1 VA with 750 V
	Overload permanent	Voltage max. 750 V, current max. 12 A
	High surge load	Voltage 1000 V 1 s, current 240 A 1 s
Analog outputs	Output variables	Double output, 12 bit resolution
	Rated values - Current	0-10 mA, 0-20 mA, 4-20 mA, conf gurable
	Rated load, current	< 500 ˙
	Rated values - Voltage	0-5 V, 0-10 V, 2-10 V, conf gurable
	Rated load, voltage	< 750 ˙
	Polarity	4 x unipolar or bipolar, conf gurable
Limit value and Pulsed outputs	Type	Open collector, (NPN transistor)
	Operating voltage	5-24 V DC, max. 30 V DC
	Operating current	max. 40 mA
	Pulse length	approx. 40 ms (pause > 100 ms)
	Hysteresis	approx. 4 % of set limit value
	Accuracy	+/- 1 % of full scale
	Caution!	**The valence of the pulses must be divided by the transmission ratio (K_N) of the current and voltage transformer used!**
Transmission behavior	Accuracy	+/- 0.5 % (with power factor +/- 0.5 % in the range >25 % of the apparent power S = U x Inom x 1.732 , with apparent power <25 %, the accuracy is +/- 1 %, below 10 % of apparent power, power factor is not measured)
	Current influence	< 0.5 % with 0.15-fold to 2-fold rated current
	Frequency influence	< 0.3 % within frequency range
	Phase angle influence	< 0.5 % with +/- 90°
	Temperature range	-15 °C to +20 °C to +30 °C to +55 °C
	Temperature influence	< 0.2 % at 10 K
	Auxiliary voltage influence	no
	Load influence	no
	External magnetic field influence	no (to 400 A/m)
	Residual ripple	< 100 mVss
	Response time	approx. 200 ms (power factor approx. 600 ms)
	Open-circuit voltage	max. 24 V
	Current limiting	max. 2-fold in case of overload
	Test voltages	4 kV between output to auxiliary voltage, 5.2 kV between input to output and input to auxiliary voltage, 2 kV between limit value or pulsed output to output
	Caution!	**The Ethernet LAN interface is galvanically connected to the outputs!**
Auxiliary voltage	Wide-range power supply parts	10-30 V AC + DC, 5 VA or 60-265 V AC + DC, 5 VA (please, specify in case of order)
Dimensions		Housing C, 90 mm wide Page A1
Weight		600 g
Installation	Fastening	Snap-on fastening on top hat rail 35 mm accord. to DIN EN 60 715
	Electrical connection	Screw terminal, 4 mm^2

Calibration	The measuring transducer is factory-calibrated. The calibration should be repeated in the manufacturer's plant every two years.
Conf guration	The measuring transducer is conf gured in the factory if the required data are known. A reconf guration is possible at any time. This will require the related software (accessory) and a PC. The measuring transducer and the PC must be connected to each other using a LAN cable (accessory). The auxiliary voltage must be connected to the measuring transducer. The various conf guration options of the inputs and outputs are program controlled. The software (accessory) for the conf guration is delivered on CD.

Connection

3-/4-wire three-phase current, any load
(inputs and outputs not used remain unconnected)

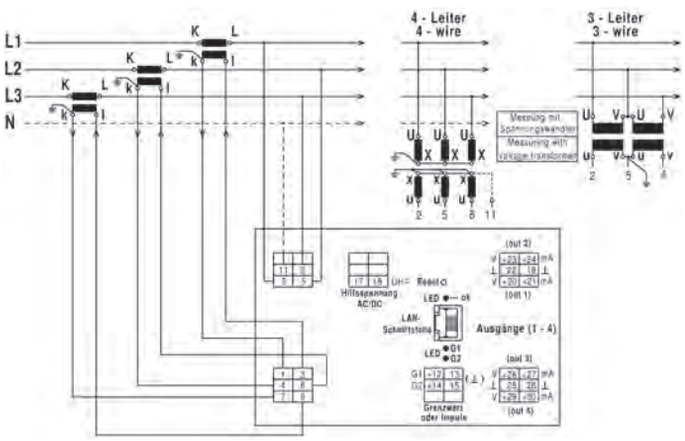

3-wire three-phase current, any load
(inputs and outputs not used remain unconnected)

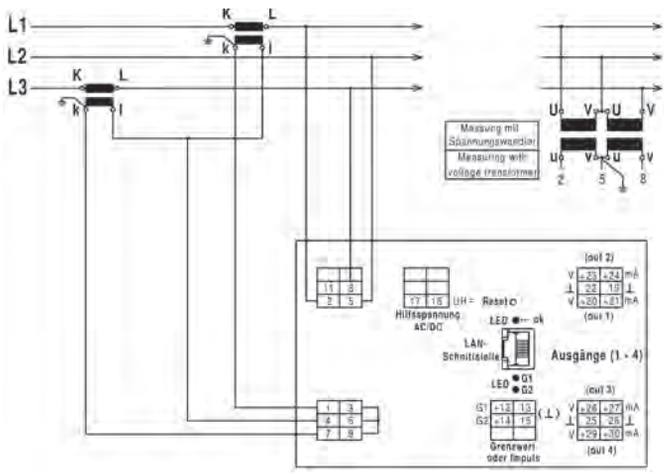

3-/4-wire three-phase current, same load
(inputs and outputs not used remain unconnected)

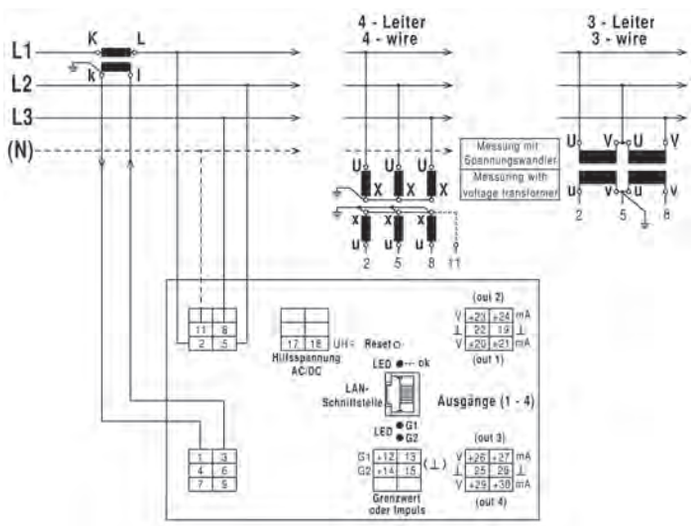

Alternating current
(inputs and outputs not used remain unconnected)

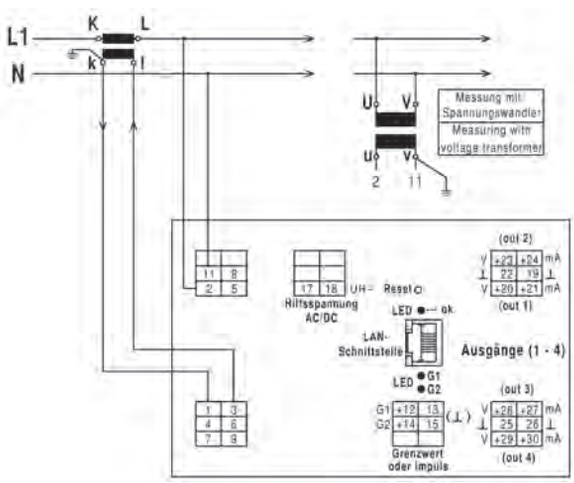

Limit value or pulsed output G1 and G2

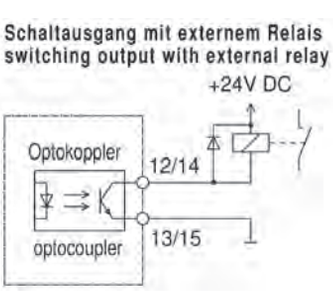

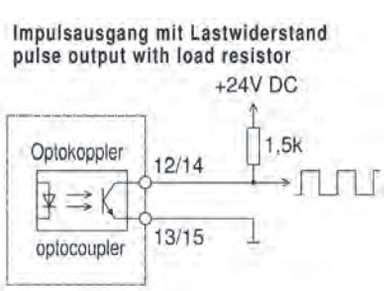

Universal measuring transducer with Ethernet interface

with HTTP, TCP/IP, Modbus-TCP protocol

with 11 bipolar configurable analog outputs,

2 limit value or pulsed output

Type:

Multi-E11-MU

Application

The measuring transducer Multi-E11-MU is used for the simultaneous transformation and isolation of current, voltage, frequency, active and reactive power, apparent power and the power factor for sinusoidal quantities into 11 impressed direct current and direct voltage signals. The measurement is possible in alternating current systems and 3-wire or 4-wire three-phase power systems with same or any load.
The 29 measurands may be displayed, stored and configured via a 10 Mbit/sec Ethernet LAN interface at the PC. Up to 13000 series of measured values may be stored in the internal memory of the measuring transducer. Furthermore, the measuring results may be displayed via web browser or be read and further processed via HTTP, TCP/IP or Modbus-TCP protocol. Two further outputs may be used as limit value or pulsed outputs. The switching status of the limit value or pulsed outputs is indicated by 2 LEDs.

Function

The parameters to be measured are sent to a 22 bit A/D converter with a sample rate of >20 kSPS via current and voltage transformers and are then further transmitted to a microcontroller which calculates the required values for the outputs from the measured parameters. The output values for current and voltage are rms-values. The frequency is calculated from the period of the voltage signal of phase L1. The active powers are calculated from the products of the samples of current and voltage of the three phases. The calculations of the reactive power of the three phases are done using the product of the samples of the currents and the 90° offset voltage signals. The apparent power is the sum of the products from the three rms-values of current and voltage.
The power factors are calculated from the apparent power values and the active power values. The output amplifiers supply impressed direct current and direct voltage signals. The output signals are galvanically isolated from the input signals and the auxiliary voltage, but linked to each other via a common ground wire. The outputs are no-load proof and short-circuit proof. The two limit value and pulsed outputs are galvanically isolated from all inputs and outputs and the auxiliary voltage. An auxiliary voltage is required.

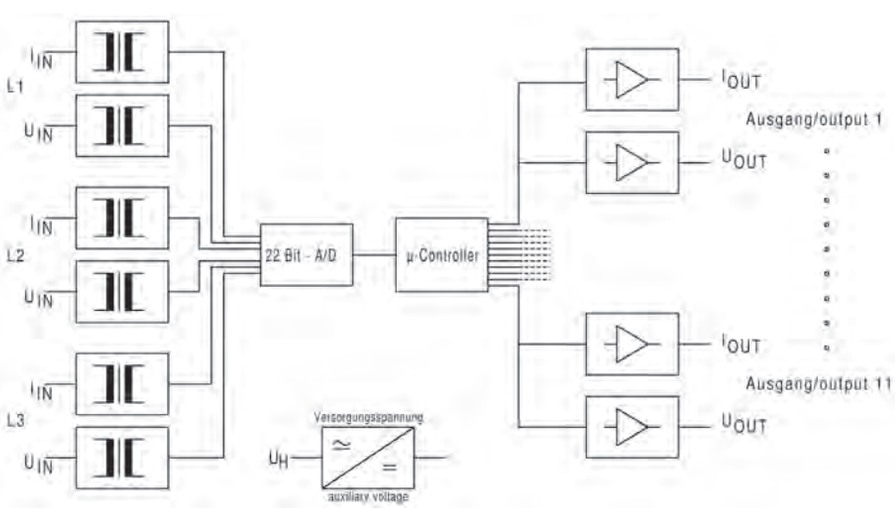

Technical data

Input	Input variable	Alternating current, alternating voltage, frequency, active power, reactive power, apparent power and power factor in alternating current systems, four-wire and three-wire three-phase power systems of same and any load, undirectional or bidirectional energy direction, conf gurable
	Rated current	2 A and 6 A
	Current range	0.3-10 A, conf gurable
	Rated voltage	100-750 V
	Voltage range	40-750 V, conf gurable
	Rated frequency	50 Hz
	Frequency range	40-80 Hz
	Energy consumption	per current path 0.06 VA with 1A, 0.3 VA with 5 A per current path 0.02 VA with 100 V, 1 VA with 750 V
	Overload permanent	Voltage max. 750 V, current max. 12 A
	High surge load	Voltage 1000 V 1 s, current 240 A 1 s
Analog outputs	Output variables	Double output, 12 bit resolution
	Rated values - Current	0-10 mA, 0-20 mA, 4-20 mA, conf gurable
	Rated load, current	< 500 ˙
	Rated values - Voltage	0-5 V, 0-10 V, 2-10 V, conf gurable
	Rated load, voltage	> 750 ˙
	Polarity	4 x unipolar or bipolar, conf gurable, 7 x unipolar
Limit value and Pulsed outputs	Type	Open collector, (NPN transistor)
	Operating voltage	5-24 V DC, max. 30 V DC
	Operating current	approx. 40 mA
	Pulse length	approx. 40 ms (pause > 100 ms)
	Hysteresis	approx. 4 % of set value
	Accuracy	+/- 1 % of full scale
	Caution!	**The valence of the pulses must be divided by the transmission ratio (K_N) of the current and voltage transformer used!**
Transmission behavior	Accuracy	+/- 0.5 % (with power factor +/- 0.5 % in the range >25 % of the apparent power S = U x Inom x 1.732 , with apparent power <25 %, the accuracy is +/- 1 %, below 10 % of apparent power, power factor is not measured)
	Current influence	< 0.5 % with 0.15-fold to 2-fold rated current
	Frequency influence	< 0.3 % within frequency range
	Phase angle influence	< 0.5 % with +/- 90°
	Temperature range	-15 °C to +20 °C to +30 °C to +55 °C
	Temperature influence	< 0.2 % at 10 K
	Auxiliary voltage influence	no
	Load influence	no
	External magnetic field influence	no (to 400 A/m)
	Residual ripple	< 100 mVss
	Response time	approx. 200 ms (power factor approx. 600 ms)
	Open-circuit voltage	max. 24 V
	Current limiting	max. 2-fold in case of overload
	Test voltages	4 kV between output to auxiliary voltage, 5.2 kV between input to output and input to auxiliary voltage, 2 kV between limit value or pulsed output to output
	Caution!	**The Ethernet LAN interface is galvanically connected to the outputs!**
Auxiliary voltage	Wide-range power supply parts	10-30 V AC + DC, 9 VA or 60-265 V AC + DC, 9 VA (please, specify in case of order)
Dimensions		Housing D, 135 mm wide Page A1
Weight		850 g
Installation	Fastening	Snap-on fastening on top hat rail 35 mm accord. to DIN EN 60 715
	Electrical connection	Screw terminal, 4 mm^2

Calibration	The measuring transducer is factory-calibrated. The calibration should be repeated in the manufacturer's plant every two years.
Conf guration	The measuring transducer is conf gured in the factory if the required data are known. A reconf guration is possible at any time. This will require the related software (accessory) and a PC. The measuring transducer and the PC must be connected to each other using a LAN cable (accessory). The auxiliary voltage must be connected to the measuring transducer. The various conf guration options of the inputs and outputs are program controlled. The software (accessory) for the conf guration is delivered on CD.

Connection

3-/4-wire three-phase current, any load
(inputs and outputs not used remain unconnected)

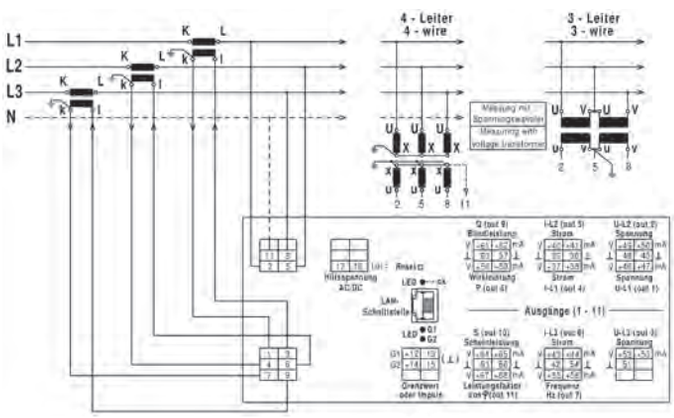

3-wire three-phase current, any load
(inputs and outputs not used remain unconnected)

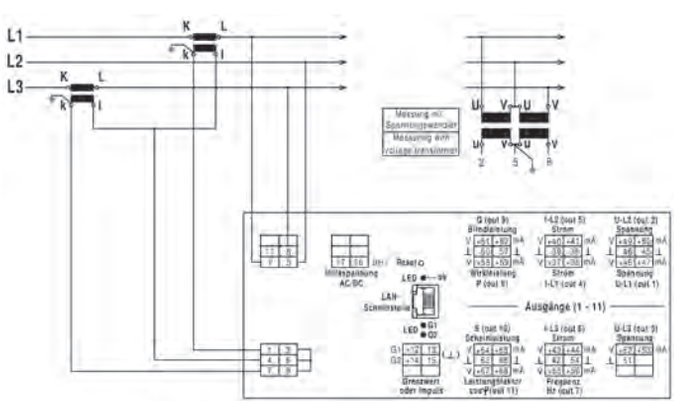

3-/4-wire three-phase current, same load
(inputs and outputs not used remain unconnected)

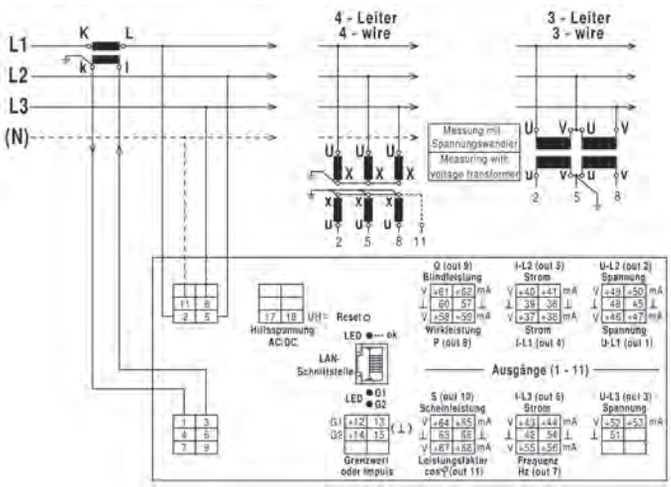

Alternating current
(inputs and outputs not used remain unconnected)

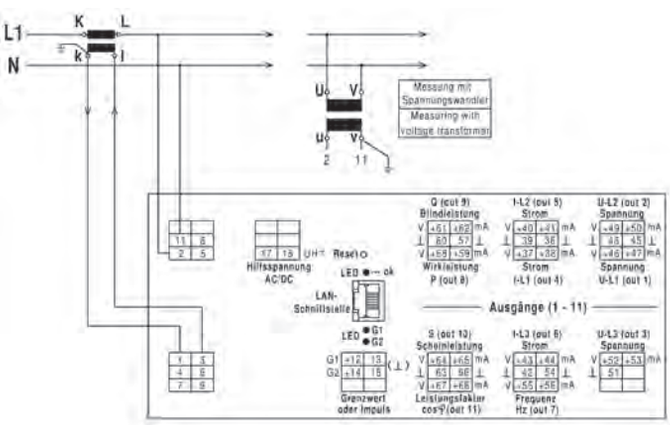

Limit value or pulsed output G1 and G2

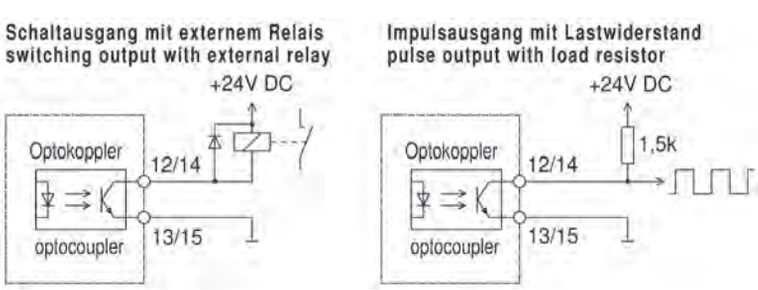

Universal measuring transducer with Ethernet interface

with HTTP, TCP/IP, Modbus-TCP protocol

with 2 limit value or pulsed output

Type:

Multi-E-MU

Application

The measuring transducer Multi-E-MU serves to measure current, voltage, frequency, active and reactive power, apparent power and the power factor in case of sinusoidal quantities. The measurement is possible in alternating current systems and 3-wire or 4-wire three-phase power systems with same or any load.
The 29 measurands may be displayed, stored and configured via a 10 Mbit/sec Ethernet LAN interface at the PC. Up to 13000 series of measured values may be stored in the internal memory of the measuring transducer. Furthermore, the measuring results may be displayed via web browser or be read and further processed via HTTP, TCP/IP or Modbus-TCP protocol. Two further outputs may be used as limit value or pulsed outputs. The switching status of the limit value or pulsed outputs is indicated by 2 LEDs.

Function

The parameters to be measured are transmitted to a 22 bit A/D converter with a sample rate of >20 kSPS via a current and voltage transformer. In a microcontroller, the required values for the outputs are calculated from the measured parameters. The output values for current and voltage are rms-values. The frequency is calculated from the period of the voltage signal of phase L1. The active powers are calculated from the products of the samples of current and voltage of the three phases. The calculations of the reactive power of the three phases are done using the product of the samples of the currents and the 90° offset voltage signals. The apparent power is the sum of the products from the three rms-values of current and voltage. The power factors are calculated from the apparent power values and the active power values.
The two limit value and pulsed outputs are galvanically isolated from all inputs and the auxiliary voltage. An auxiliary voltage is required

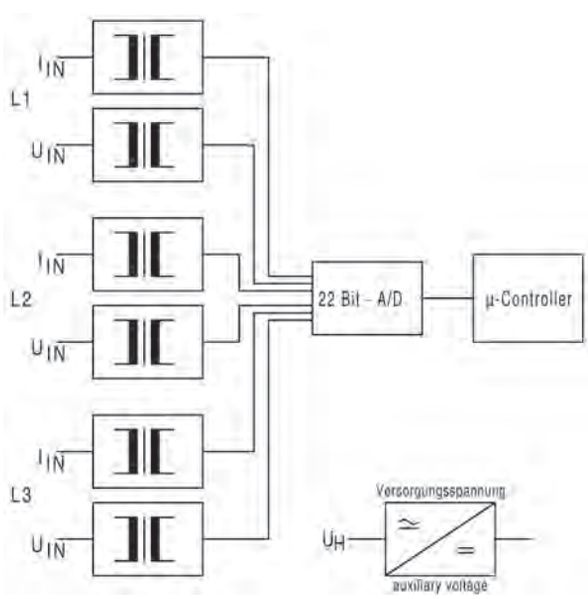

Technical data

Input	Input variable	Alternating current, alternating voltage, frequency, active power, reactive power, apparent power and power factor in alternating current systems, four-wire and three-wire three-phase power systems of same and any load, unidirectional or bidirectional energy direction, conf gurable
	Rated current	2 A and 6 A
	Current range	0.3-10 A, conf gurable
	Rated voltage	100-750 V
	Voltage range	40-750 V, conf gurable
	Rated frequency	50 Hz
	Frequency range	40-80 Hz
	Energy consumption	per current path 0.06 VA with 1A, 0.3 VA with 5 A per current path 0.02 VA with 100 V, 1 VA with 750 V
	Overload permanent	Voltage max. 750 V, current max. 12 A
	High surge load	Voltage 1000 V 1 s, current 240 A 1 s
Limit value and Pulsed outputs	Type	Open collector, (NPN transistor)
	Operating voltage	5-24 V DC, max. 30 V DC
	Operating current	max. 40 mA
	Pulse length	approx. 40 ms (pause > 100 ms)
	Hysteresis	approx. 4 % of set value
	Accuracy	+/- 1 % of full scale
	Caution!	**The valence of the pulses must be divided by the transmission ratio (K_N) of the current and voltage transformer used!**
Transmission behavior	Accuracy	+/- 0.5 % (with power factor +/- 0.5 % in the range >25 % of the apparent power S = U x Inom x 1.732 , with apparent power <25 %, the accuracy is +/- 1 %, below 10 % of apparent power, power factor is not measured)
	Current influence	< 0.5 % with 0.15-fold to 2-fold rated current
	Frequency influence	< 0.3 % within frequency range
	Phase angle influence	< 0.5 % with +/- 90°
	Temperature range	-15 °C to +20 °C to +30 °C to +55 °C
	Temperature influence	< 0.2 % at 10 K
	Auxiliary voltage influence	no
	Load influence	no
	External magnetic field influence	no (to 400 A/m)
	Test voltages	5.2 kV between input to auxiliary voltage, 5.2 kV between input and interface, 2 kV between limit value or pulsed output and interface
Auxiliary voltage	Wide-range power supply parts	10-30 V AC + DC, 3 VA or 60-265 V AC + DC, 3 VA (please, specify in case of order)
Dimensions		Housing E, 67.5 mm wide, Page A 1
Weight		500 g
Installation	Fastening	Snap-on fastening on top hat rail 35 mm accord. to DIN EN 60 715
	Electrical connection	Screw terminal, 4 mm^2
Calibration	The measuring transducer is factory-calibrated. The calibration should be repeated in the manufacturer's plant every two years.	
Conf guration	The measuring transducer is conf gured in the factory if the required data are known. A reconf guration is possible at any time. This will require the related software (accessory) and a PC. The measuring transducer and the PC must be connected to each other using a LAN cable (accessory). The auxiliary voltage must be connected to the measuring transducer. The various conf guration options of the inputs are program controlled. The software (accessory) for the conf guration is delivered on CD.	

Connection

3-/4-wire three-phase current, any load
(inputs and outputs not used remain unconnected)

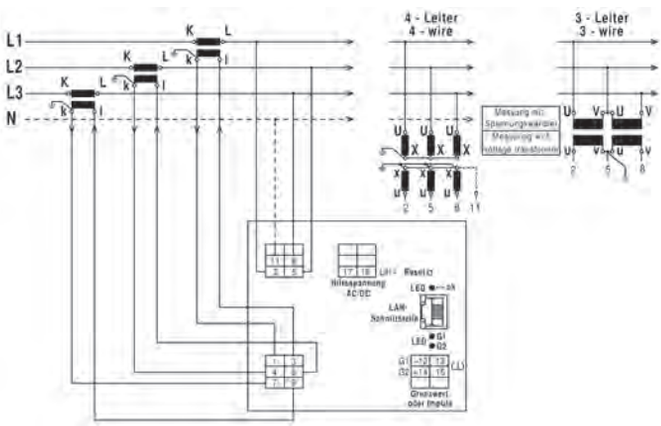

3-wire three-phase current, any load
(inputs and outputs not used remain unconnected)

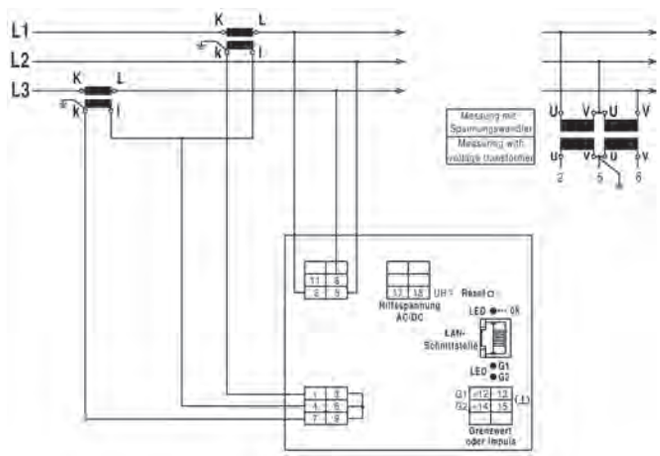

3-/4-wire three-phase current, same load
(inputs and outputs not used remain unconnected)

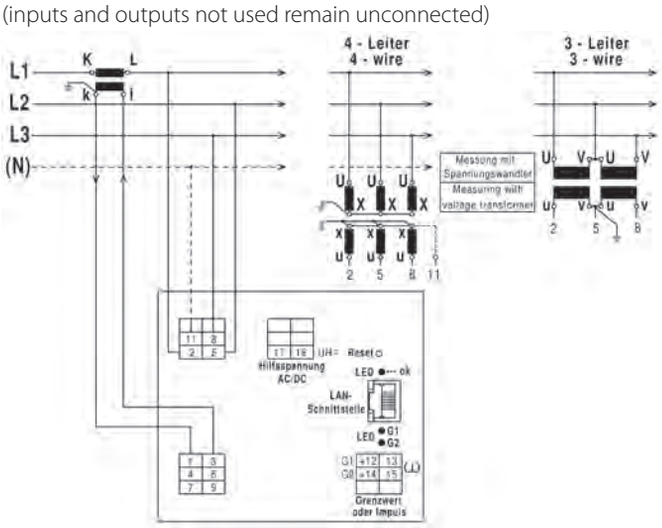

Alternating current
(inputs and outputs not used remain unconnected)

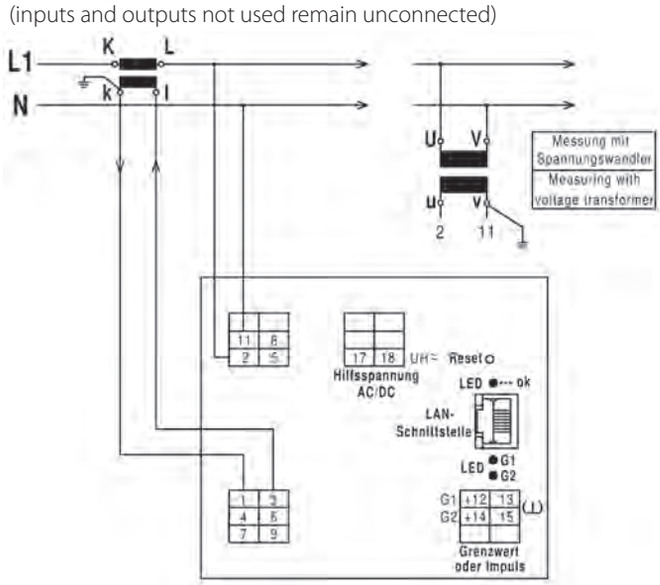

Limit value or pulsed output G1 and G2

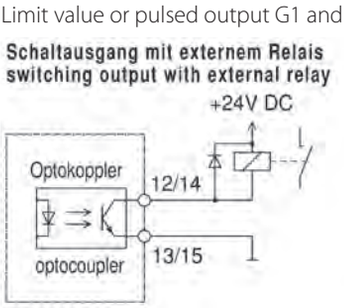

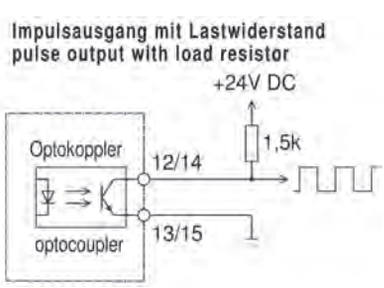

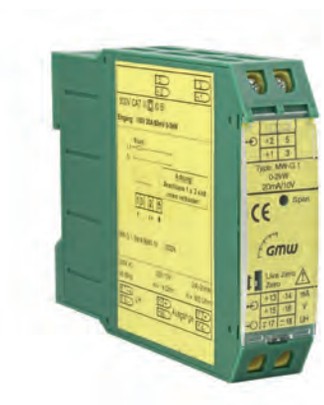

Measuring transducer for direct current power

Type:

MW-G.1

Application

The measuring transducer MW-G.1 is used for the transformation and isolation of a DC power into an impressed direct current and direct voltage signal. The calibrated double outputs are switchable between 0-20 mA and 0-10 V or 4-20 mA and 2-10 V.

Function

The parameters to be measured are transmitted to the analog multiplier via internal voltage dividers or shunts. The instantaneous values are then multiplied and formed as the mean value of a direct voltage matching the active power in a subsequent integration stage. The galvanic isolation between input and output signals is done using optocoupler. An downstream amplifier supplies the impressed direct current and direct voltage signals. Both outputs are no-load proof and short-circuit proof. Connecting the two outputs is not permissible. An auxiliary voltage is required.

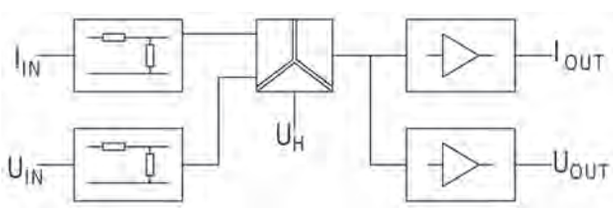

Connection

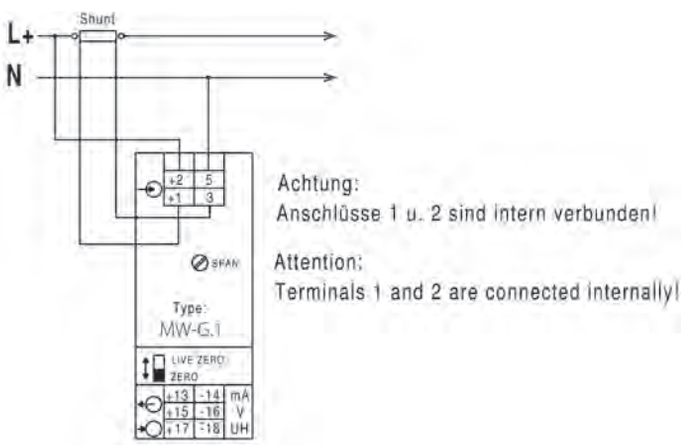

Technical data

Input	Input variable	Direct current power (DC power)
	Nominal power	50-150 % of the DC power P = U x I
	Rated current	via separate shunt with 0-60 mV, Ri ˆ 10 M ˙
	Rated voltage	a value from 0-10 V to 0-600 V,
		Ri ˆ 4 k ˙ / V
	Overload permanent	Current input (shunt) 1.2 fold
		Voltage input 5-fold / max. 830 V
	High surge load	Current input 5-fold, 5 s
		Voltage input 5-fold / max. 1000 V 1 s
Output	Output variables	Double output
	Rated values	0-20 mA / 500 ˙ load and 0-10 V / max. load 10 mA
		as well as 4-20 mA / 500 ˙ load and 2-10 V / max. load 10 mA
		switchable on the front side
Transmission behavior	Accuracy	± 0.5 %
	Temperature range	- 15 °C to +20 °C to +30 °C to 55 °C
	Temperature inf uence	< 0.3 % at 10 K
	Auxiliary voltage influence	no
	Load inf uence	no
	External magnetic f eld inf uence	no (400 A/m)
	Residual ripple	< 30 mVss
	Response time	< 300 ms
	Open-circuit voltage	max. 24 V
	Current limiting	max. 2-fold in case of overload
	Test voltage	4 kV between input, output, auxiliary voltage
Auxiliary voltage		230 V AC ± 20 %, 45-65 Hz, 2.5 VA
	Options	● 110 V AC ± 20 %, 45-65 Hz, 2.5 VA
		● 24 V DC, - 15 % to + 25 %, 2 W
		● 6-30 V AC + DC, 2 VA
		● 36-265 V AC + DC, 2 VA
Dimensions	Housing	Housing A, (22.5 mm wide) Page A1
Weight		190 g
Installation	Fastening	Snap-on fastening on top hat rail 35 mm accord. to DIN EN 60 715
	Electrical connection	Screw terminal max. 4 mm²

Measuring transducer for direct current power installations up to 1000 V (CAT III)

Type:

MW-GT.1

Application

The measuring transducer MW-GT.1 is used for the transformation and isolation of a DC power into an impressed direct current and direct voltage signal. An integrated limit monitoring serves for monitoring the input signal.

Function

The parameters to be measured are transmitted to the microcontroller via internal voltage dividers or shunts. The instantaneous values are then multiplied and formed as the mean value of a direct voltage matching the DC power in a subsequent integration stage. The galvanic isolation is realized using an optocoupler. An downstream amplifier supplies the impressed direct current and direct voltage signals. Both outputs are no-load proof and short-circuit proof. Connecting the two outputs is not permissible. The limit value may be adjusted within a range of 0-120 % of the input signal. An auxiliary voltage is required.

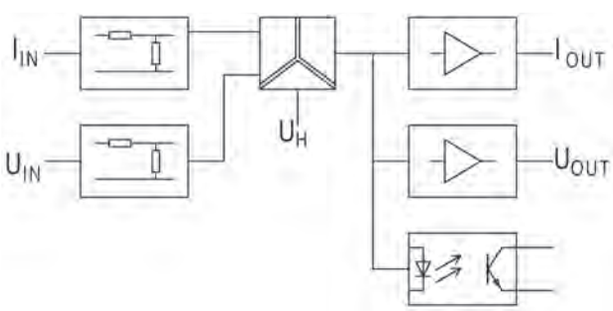

Connection

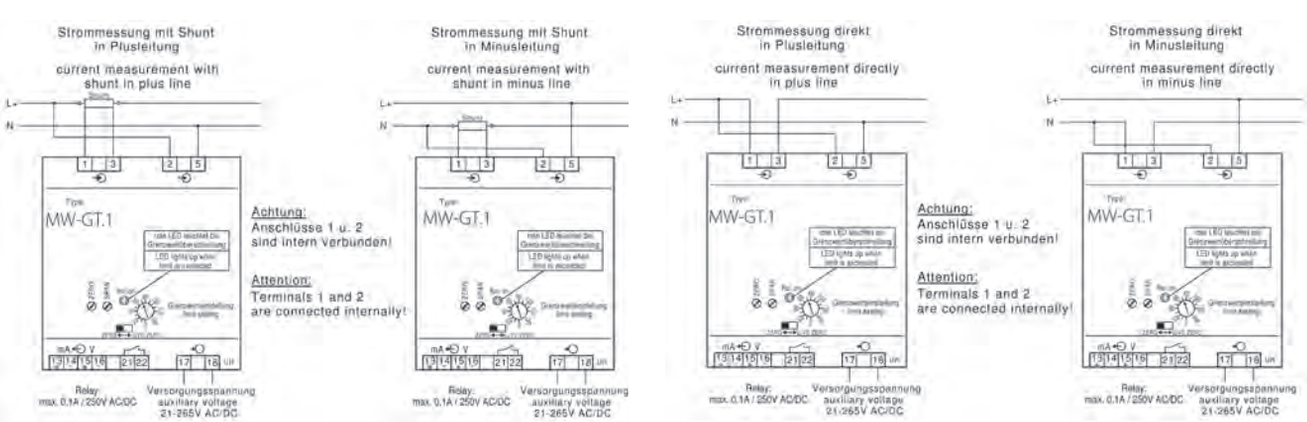

Technical data

Input	Input variable	DC power, pulsed DC power (e.g. PWM) within a range of 20 Hz–30 kHz
	Nominal power	50-150 % of the DC power P = U x I
	Rated current	via seperate shunt with 0-60 mV, Ri ˆ 10 M˙ or dir ect measurement 0-5 A
	Rated voltages	a value of 0-1000 V or 0-1500 V (other values on request),Ri ˆ 2 M˙
	Option	• Transmission of both energy directions
	Overload permanent	Current input (shunt) 1.2 fold
		Voltage input 5-fold / max. 2000 V
	High surge load	Current input 5-fold, 5 s
		Voltage input 5-fold / max. 2000 V 1 s
Output	Output variable	Double output
	Rated values	0-20 mA / 0-500 ˙ load and 0-10 V, max. load 10 mA as well as
		4-20 mA / 0-500 ˙ load and 2-10 V max. load 10 mA, switchable on the front side
		• Bipolar output (e.g.–20 mA – 0 – +20 mA and –10 V – 0 – +10 V, without limit monitoring
		• Zero point rise (e.g. 0-10-20 mA and 0-5-10 V)
	Limit value output	1 NO contact, hysteresis approx. 4 % of limit value, contact load
		max. 0.1 A AC/DC, 250 V AC/DC
	Function indicator	red LED if limit value is exceeded
Transmission behavior	Accuracy	± 0.5 %
	Temperature range	- 15 °C to +20 °C to +30 °C to 55 °C
	Temperature inf uence	< 0.3 % at 10 K
	Auxiliary voltage influence	no
	Load inf uence	no
	External magnetic f eld inf uence	no (400 A/m)
	Residual ripple	< 50 mVss
	Response time	< 300 ms
	Open-circuit voltage	max. 24 V
	Current limiting	max. 2-fold in case of overload
	Test voltages	7.4 kV between input to output, input to auxiliary voltage and input to relay contacts
		4 kV between output to auxiliary voltage and to relay contacts
Standards	EMC	DIN EN 61326
	Mechanical strength	DIN EN 61010 Part 1
	Electrical safety	DIN EN 61010 Part 1
		Housing insulated, protection class II
		for working voltages up to 1000 V (phase to neutral) pollution
		level 2, Measuring category CAT III
	Accuracy, overload	DIN EN 60688
	Isolation	DIN EN 61010 Part 1, 3.52 kV 50 Hz 10 s and 7.4 kV 50 Hz 10 s
	Air and creep distances	DIN EN 61010 Part 1
	IP code	DIN EN 60529 Housing IP30, terminals IP20
	Connection	DIN 43807
Auxiliary voltage		21-265 VAC + DC, 2 VA
Dimensions		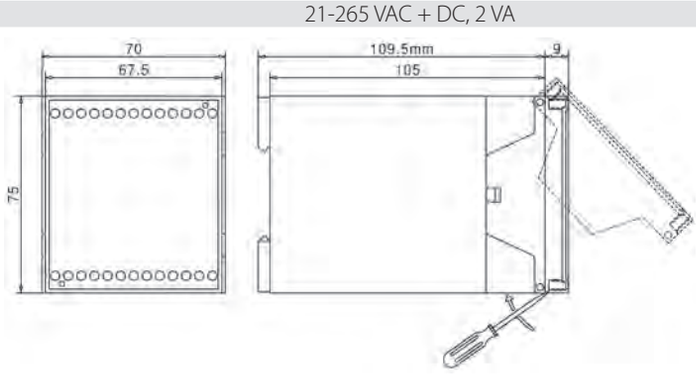
Weight		190 g
Installation	Fastening	Snap-on fastening on top hat rail 35 mm accord. to DIN EN 60715
	Electrical connection	Screw terminal max. 4 mm²

Measuring transducer for direct current and direct voltage

Type:

MA-G.1

MV-G.1

Application

The measuring transducers MA-G.1 and MV-G.1 are used for the transformation and isolation of a direct current or a direct voltage into an impressed direct current and direct voltage signal. The calibrated double outputs are switchable between 0-20 mA and 0-10 V or 4-20 mA and 2-10 V.

Function

The measurand is transmitted to the amplifier or impedance converter via an input protective circuit. The direct voltage generated there is transformed into an impressed direct current and in an impressed direct voltage. The galvanic isolation is realized using an optocoupler. Both outputs are no-load proof and short-circuit proof. Connecting the two outputs is not permissible. An auxiliary voltage is required.

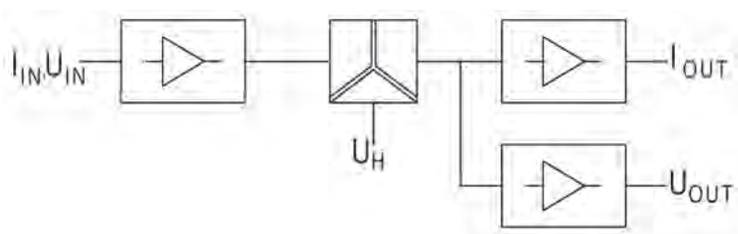

Connection

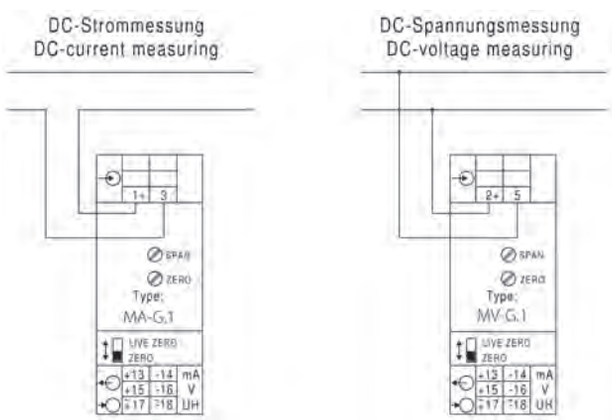

Technical data

Input	Input variable	Direct current or direct voltage
	Rated values	MA-G.1 a value from 0-100 µA to 0-5 A, voltage drop 60 mV
		MV-G.1 a value from 0-5 mV to 0-600 V
		Ri = 100 k ˙ up t o 1 V, > 1 V 100 k ˙ / V, however max. 2 M ˙
	Option	● Transmission of both polarities
	Overload permanent	Current: 2-fold
		Voltage: 5-fold / max. 830 V
	High surge load	Current: 20-fold, 1 s
Output	Output variables	Double output
	Rated values	0-20 mA / 500 ˙ load and 0-10 V / max. load 10 mA
		as well as 4-20 mA / 500 ˙ load and 2-10 V / max. load 10 mA
		switchable on the front side
	Options	
	● Bipolar output	e.g. - 20 - 0 - + 20 mA / 500 ˙ load and
		- 10 - 0 - + 10 V / max. load 10 mA
	● Zero point rise	e.g. 0-10-20 mA / 500 ˙ load and
		0-5-10 V / max. load 10 mA
Transmission behavior	Accuracy	± 0.5 %
	Temperature range	- 15 °C to +20 °C to +30 °C to 55 °C
	Temperature inf uence	< 0.1 % at 10 K
	Auxiliary voltage influence	no
	Load inf uence	no
	External magnetic f eld inf uence	no (400 A/m)
	Residual ripple	< 15 mVss
	Response time	< 300 ms
	Open-circuit voltage	max. 24 V
	Current limiting	max. 2-fold in case of overload
	Test voltage	< 500 V: 4 kV between input, output, auxiliary voltage
		> 500 V: 5.2 kV between input and output
		4 kV input / output to auxiliary voltage
Auxiliary voltage		230 V AC ± 20 %, 45-65 Hz, 2.5 VA
	Options	● 110 V AC ± 20 %, 45-65 Hz, 2.5 VA
		● 24 V DC, - 15 % to + 25 %, 2 W
		● 6-30 V AC + DC, 2 VA
		● 36-265 V AC + DC, 2 VA
Dimensions	Housing	Housing A, (22.5 mm wide) Page A1
Weight		170 g
Installation	Fastening	Snap-on fastening on top hat rail 35 mm accord. to DIN EN 60 715
	Electrical connection	Screw terminal max. 4 mm²

Measuring transducer for direct current and direct voltage for installations up to 1000 V (CAT III)

Type:

MA-GT.1

MV-GT.1

Application

The measuring transducers MA-GT.1 and MV-GT.1 are used for the transformation and isolation of a direct current or a direct voltage into an impressed direct current and direct voltage signal. An integrated limit monitoring serves for monitoring the input signal.

Function

The measurand is transmitted to the amplifier or impedance converter via an input protective circuit. The direct voltage generated there is transformed into an impressed direct current and in an impressed direct voltage. The galvanic isolation is realized using an optocoupler. Both outputs are no-load proof and short-circuit proof. Connecting the two outputs is not permissible. The limit value may be adjusted within a range of 0-120 % of the input signal. Exceeding the limit value is indicated by an LED. An auxiliary voltage is required.

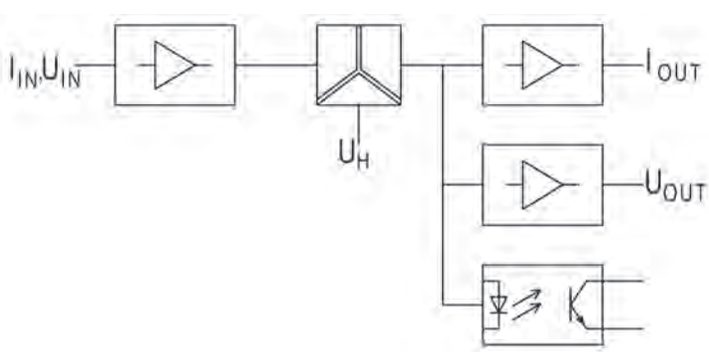

Connection

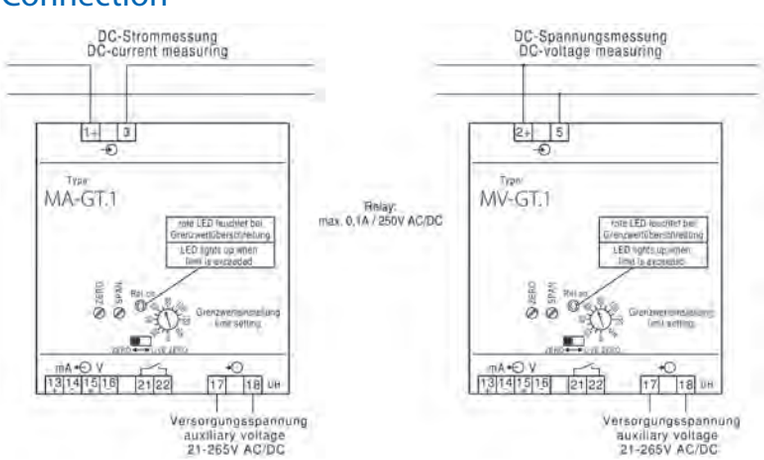

Technical data

Input	Input variable	Direct current or direct voltage
	Rated values	MA-GT.1 a value from 0-100 µA to 0-5 A , voltage drop 60 mV
		MV-GT.1 a value of 0-1000 V or 0-1500 V, R_i = 2 M˙
	Option	● Transmission of both polarities (no limit value monitoring!)
	Overload permanent	for current 2-fold, for voltage 5-fold / max. 2000 V
	High surge load	for current 20-fold, 1 s
Output	Output variable	Double output
	Rated values	0-20 mA / 0-500 ˙ load and 0-10 V, max. load 10 mA
		as well as 4-20 mA / 0-500 ˙ load and 2-10 V, max. load 10 mA,
		switchable on the front side
	Limit value output	1 NO, hysteresis approx. 4 % of limit value, contact load
		max. 0.1 A AC/DC, 250 V AC/DC
	Function indicator	red LED if limit value is exceeded
Transmission behavior	Accuracy	+/-0.5 %
	Temperature range	-15 °C to +20 °C to +30 °C to +55 °C
	Temperature inf uence	< 0.2 % at 10 K
	Auxiliary voltage influence	no
	Load inf uence	no
	External magnetic f eld inf uence	no (to 400 A/m)
	Residual ripple	< 50 mVss
	Response time	< 300 ms
	Open-circuit voltage	max. 24 V
	Current limiting	max. 2-fold in case of overload
	Test voltages	7.4 kV between input to output, input to auxiliary voltage and input to
		relay contacts
		4 kV between output to auxiliary voltage and to relay contacts
Standards	EMC	DIN EN 61326
	Mechanical strength	DIN EN 61010 Part 1
	Electrical safety	DIN EN 61010 Part 1
		Housing insulated, protection class II
		for working voltages up to 1000V (phase to neutral)
		pollution level 2, Measuring category CAT III
	Accuracy, overload	DIN EN 60688
	Isolation	DIN EN 61010 Part 1, 3.52 kV 50 Hz 10 s and 7.4 kV 50 Hz 10 s
	Air and creep distances	DIN EN 61010 Part 1
	IP code	DIN EN 60529 Housing IP30, terminals IP20
	Connection	DIN 43807
Auxiliary voltage		21-265 VAC + DC, 2 VA
Weight		220 g

Dimensions

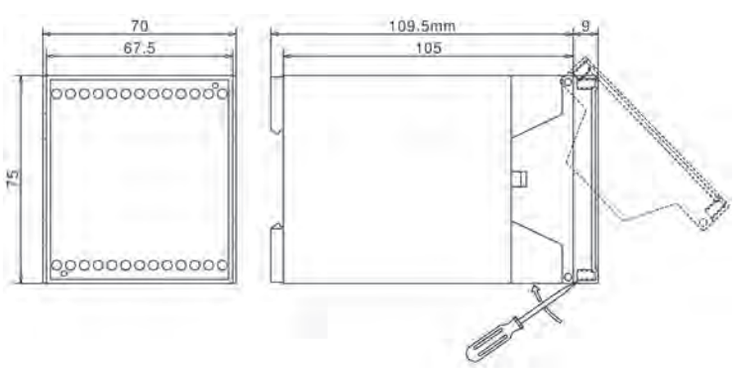

Installation	Fastening	Snap-on fastening on top hat rail 35 mm accord. to DIN EN 60715
	Electrical connection	Screw terminal max. 4 mm^2

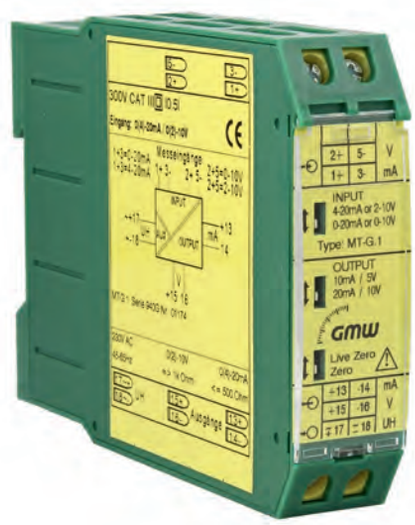

Measuring transducer for Standard signals

with selectable calibrated inputs and outputs

Type:

MT-G.1

Application

The measuring transducer MT-G.1 is used for the transformation and isolation of a direct current or direct voltage standard signal into an impressed direct current and direct voltage signal. The calibrated inputs are selectable between the standard signals 0-20 mA, 4-20 mA, 0-10 V or 2-10 V. The calibrated double outputs are switchable between 0-20 mA and 0-10 V, 4-20 mA and 2-10 V, 0-10 mA and 0-5 V or 2-10 mA and 1-5 V.

Function

The measurand is transmitted to the amplifier or impedance converter via an input protective circuit. The direct voltage generated there is transformed into an impressed direct current and in an impressed direct voltage. The galvanic isolation is realized using an optocoupler. Both outputs are no-load proof and short-circuit proof. Connecting the two outputs is not permissible. An auxiliary voltage is required.

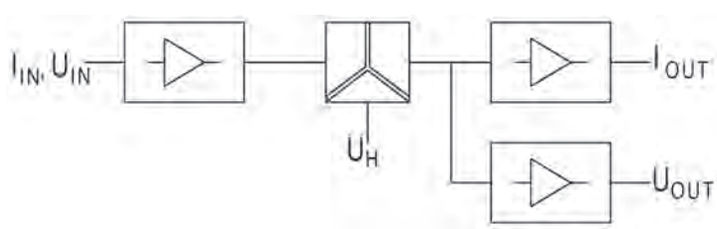

Connection

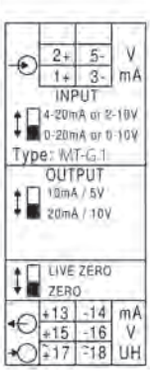

Normsignaleingänge
inputs for standard signals

1+ / 3- = 0-20mA
1+ / 3- = 4-20mA
2+ / 5- = 0-10V
2+ / 5- = 2-10V

Technical data

Input	Input variable	Direct current or direct voltage
	Rated values	0-20 mA, 4-20 mA, Ri = 100 ˙ , 0-10 V, 2-10 V, Ri = 50 k ˙
	Overload permanent	Current: 2-fold
		Voltage: 5-fold
	High surge load	Current: 20-fold, 1 s
		Voltage: 5-fold
Output	Output variables	Double output
	Rated values	0-20 mA / 500 ˙ load and 0-10 V / max. load 10 mA
		as well as 4-20 mA / 500 ˙ load and 2-10 V / max. load 10 mA
		switchable on the front side
		or
		0-10 mA / 500 ˙ load and 0-5 V / max. load 10 mA
		as well as 2-10 mA / 500 ˙ load and 1-5 V / max. load 10 mA
		switchable on the front side
Transmission behavior	Accuracy	± 0.5 %
	Temperature range	- 15 °C to +20 °C to +30 °C to +55 °C
	Temperature inf uence	< 0.1 % at 10 K
	Auxiliary voltage influence	no
	Load inf uence	no
	External magnetic f eld inf uence	no (400 A/m)
	Residual ripple	< 15 mVss
	Response time	< 30 ms
	Open-circuit voltage	max. 24 V
	Current limiting	max. 2-fold in case of overload
	Test voltage	4 kV between input, output, auxiliary voltage
Auxiliary voltage		230 V AC ± 20 %, 45-65 Hz, 2.5 VA
	Options	● 110 V AC ± 20 %, 45-65 Hz, 2.5 VA
		● 24 V DC - 15 % to + 25 %, 2 W
		● 6-30 V AC + DC, 2 VA
		● 36-265 V AC + DC, 2 VA
Dimensions	Housing	Housing A, (22.5 mm wide) Page A1
Weight		180 g
Installation	Fastening	Snap-on fastening on top hat rail 35 mm accord. to DIN EN 60 715
	Electrical connection	Screw terminal max. 4 mm²

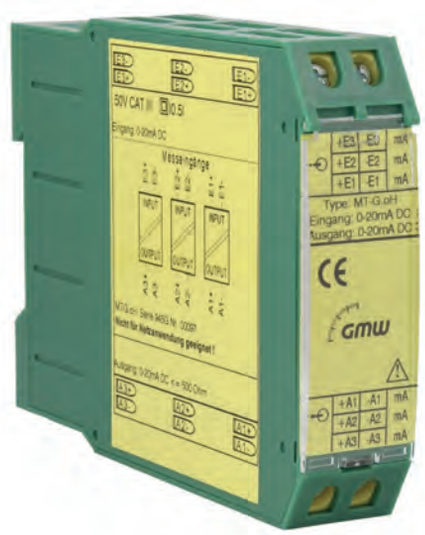

Measuring transducer for standard signals

without auxiliary voltage

Type:

MT-G.oH

Application

The measuring transducers MT-G.oH are used for the galvanic isolation of one, two or three direct current standard signals. The standard signal may lie within a range of 0-20 mA.

Function

The input current to be measured is transformed into a frequency signal and transmitted to the output side via a transformer after galvanic isolation. At the output side, the frequency signal is retransformed into a direct current. The auxiliary energy required for transformation and transmission is generated from the input signal. Therefore, the input resistance of the measuring transducer depends on the input current and the load connected to the output.

Connection

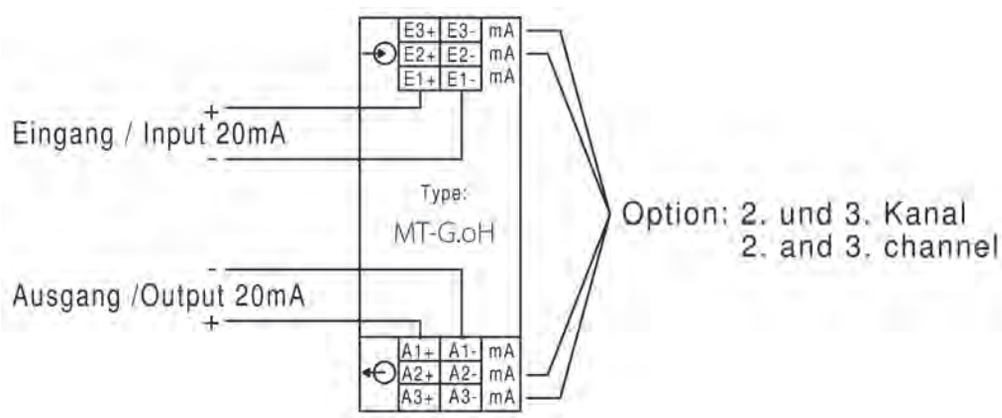

Technical data

Input	Input variable	Direct current
	Rated input current	20 mA
	Max. input voltage	16 V
	Energy consumption	2.7 V for 20 mA
	Overload permanent	2-fold
	High surge load	20-fold, 1 s
Output	Output variable	impressed direct current (1, 2 or 3 outputs)
	Rated output current	0-20 mA / 500 ˙ load
Transmission behavior	Accuracy	+/- 0.2 %
	Temperature range	-15 °C to +20 °C to +30 °C to +55 °C
	Temperature inf uence	< 0.2 % at 10 K
	Load inf uence	˝0.1 % with 500 ˙ load
	External magnetic f eld inf uence	no (to 400 A/m)
	Residual ripple	< 30 mVss
	Response time	< 20 ms with 500 ˙ load
	Open-circuit voltage	max. 24 V
	Test voltage	0.5 kV between input and output
		4 kV between the transmission channels
	Caution!	The MT-G.oH is not suited for power grid applications!
Dimensions	Housing	Housing A, (22.5 mm wide) Page A1
Weight		120 g
Installation	Fastening	Snap-on fastening on top hat rail 35 mm accord. to DIN EN 60715
	Electrical connection	Screw terminal max. 4 mm^2

Measuring transducer for temperature

(resistance thermometer)

Type:

MPt.1

Application

The measuring transducer MPt.1 is used for the transformation and isolation of a change in resistance due to the temperature into an impressed direct current and direct voltage signal. The calibrated double outputs are switchable between 0-20 mA and 0-10 V or 4-20 mA and 2-10 V.

Function

The resistance thermometer Pt 100 / Pt 1000 is a resistance depending on the temperature. A constant measurement current flows via the resistance thermometer to a sensor resistor which is part of a bridge circuit. The direct voltage generated there is linearized and amplified. It is then transformed into an impressed direct current and in an impressed direct voltage in a subsequent circuit. The galvanic isolation is realized using an optocoupler. Both outputs are no-load proof and short-circuit proof. Connecting the two outputs is not permissible. An auxiliary voltage is required.

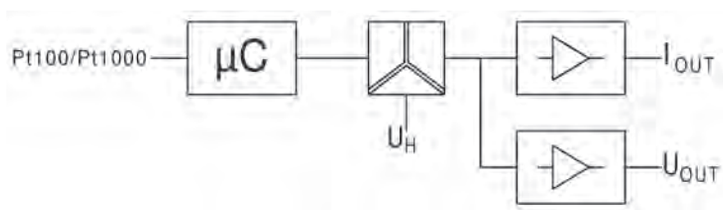

Connection

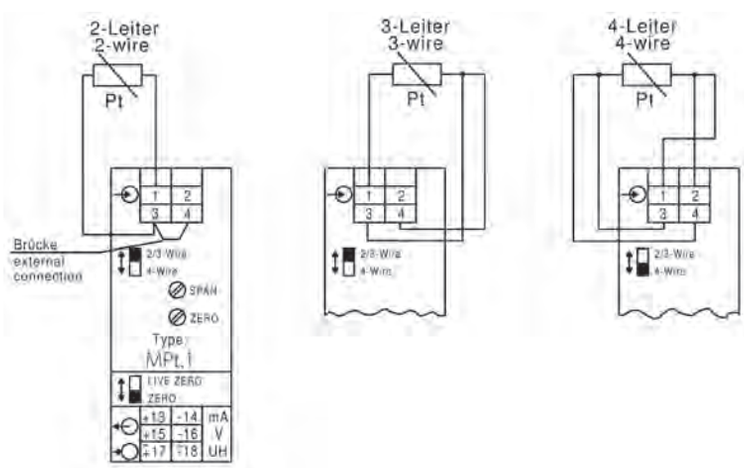

Technical data

Input	Input variable	Resistance Pt 100
	Option	● Resistance Pt 1000
	Rated values	-200 ... +850 °C, arbitrary temperature range (min. span 40 K)
		other values on request
		The constant current through the sensor amounts to max. 1 mA
	Circuit type	Two-wire, three-wire or four-wire circuit
	Input lead	Two-wire: Adjustment 0-10 ˚ , using an installed spindle potentiometer
		Three-wire: No adjustment necessary, max. 100 ˚ symmetr ical
		Four-wire: No adjustment necessary
Output	Output variables	Double output
	Rated values	0-20 mA / 500 ˚ load and 0-10 V / max. load 10 mA
		as well as 4-20 mA / 500 ˚ load and 2-10 V / max. load 10 mA
		switchable on the front side
Transmission behavior	Accuracy	± 0.5 %
	Temperature range	- 15 °C to +20 °C to +30 °C to +55 °C
	Temperature inf uence	< 0.2 % at 10 K
	Auxiliary voltage influence	no
	Load inf uence	no
	External magnetic f eld inf uence	no (400 A/m)
	Residual ripple	< 30 mVss
	Response time	< 300 ms
	Open-circuit voltage	max. 24 V
	Current limiting	max. 2-fold in case of overload
	Test voltage	4 kV between input, output, auxiliary voltage
Auxiliary voltage		230 V AC ± 20 %, 45-65 Hz, 2.5 VA
	Options	● 110 V AC ± 20 %, 45-65 Hz, 2.5 VA
		● 24 V DC - 15 % to + 25 %, 2 W
		● 6-30 V AC + DC, 2 VA
		● 36-265 V AC + DC, 2 VA
Dimensions	Housing	Housing A, (22.5 mm wide) Page A1
Weight		150 g
Installation	Fastening	Snap-on fastening on top hat rail 35 mm accord. to DIN EN 60 715
	Electrical connection	Screw terminal max. 4 mm^2

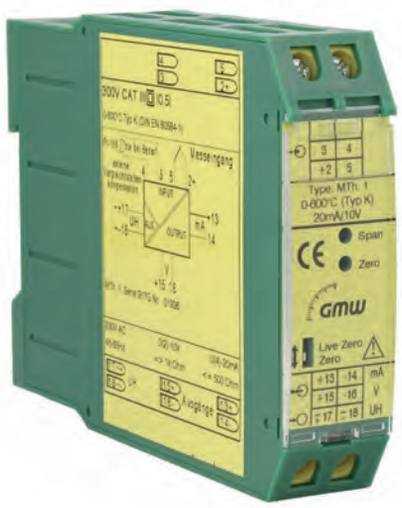

Measuring transducer for temperature

(thermocouple, according to DIN EN 60 584)

Type:

MTh.1

Application

The measuring transducer MTh.1 is used for the transformation and isolation of a temperature-dependent voltage of a thermocouple into an impressed direct current and direct voltage signal. The calibrated double outputs are switchable between 0-20 mA and 0-10 V or 4-20 mA and 2-10 V.

Function

The thermocouple constitutes a voltage source depending on the temperature. This voltage is supplied to an amplifier with integrated cold junction compensation. Following the linearization, the voltage is transformed into an impressed direct current and in an impressed direct voltage. The galvanic isolation is realized using an optocoupler. Both outputs are no-load proof and short-circuit proof. Connecting the two outputs is not permissible. An auxiliary voltage is required.

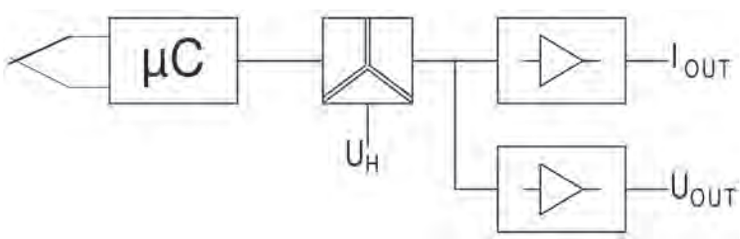

Connection

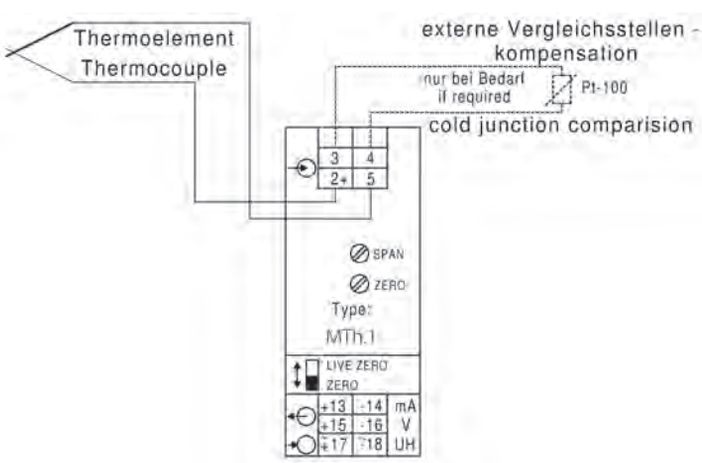

Technical data

Input	Rated values Type J (DIN EN 60584-1)	-210 ... +1200 °C, arbitrary temperature range (min. span 200 K)
	Type K (DIN EN 60584-1)	-270 ... +1200 °C, arbitrary temperature range (min. span 200 K)
	Type N (DIN EN 60584-1)	-270 ... +1300 °C, arbitrary temperature range (min. span 200 K)
	Type B (DIN EN 60584-1)	+100 ... +1820 °C, arbitrary temperature range (min. span 200 K)
	Type E (DIN EN 60584-1)	-270 ... +1000 °C, arbitrary temperature range (min. span 200 K)
	Type R (DIN EN 60584-1)	-50 ... +1768 °C, arbitrary temperature range (min. span 200 K)
	Type T (DIN EN 60584-1)	-270 ... +400 °C, arbitrary temperature range (min. span 200 K)
	Type S (DIN EN 60584-1)	-50 ... +1768 °C, arbitrary temperature range (min. span 200 K)
	Input wire	No adjustment necessary
	Cold junction	0-50 °C
	Measuring circuit interruption	max. 2-fold output current
Output	Output variables	Double output
	Rated values	0-20 mA / 500 ˙ load and 0-10 V / max. load 10 mA
		as well as 4-20 mA / 500 ˙ load and 2-10 V / max. load 10 mA
		switchable on the front side
Transmission behavior	Accuracy	± 0.5 %
	Temperature range	- 15 °C to +20 °C to +30 °C to +55 °C
	Temperature inf uence	< 0.2 % at 10 K
	Auxiliary voltage influence	no
	Load inf uence	no
	External magnetic f eld inf uence	no (400 A/m)
	Residual ripple	< 30 mVss
	Response time	< 300 ms
	Open-circuit voltage	max. 24 V
	Current limiting	max. 2-fold in case of overload
	Test voltage	4 kV between input, output, auxiliary voltage
Auxiliary voltage		230 V AC ± 20 %, 45-65 Hz, 2.5 VA
	Options	● 110 V AC ± 20 %, 45-65 Hz, 2.5 VA
		● 24 V DC - 15 % to + 25 %, 2 W
		● 6-30 V AC + DC, 2 VA
		● 36-265 V AC + DC, 2 VA
Dimensions	Housing	Housing A, (22.5 mm wide) Page A1
Weight		170 g
Installation	Fastening	Snap-on fastening on top hat rail 35 mm accord. to DIN EN 60 715
	Electrical connection	Screw terminal max. 4 mm²

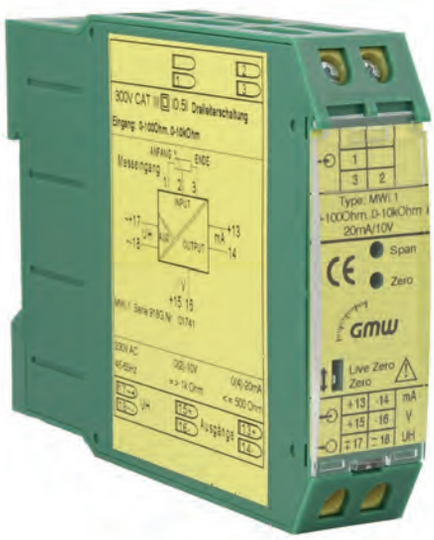

Measuring transducer for potentiometers and resistors

Type:

MWi.1

Application

The measuring transducer MWi.1 is used for the transformation and isolation of a change in resistance into an impressed direct current and direct voltage signal. The calibrated double outputs are switchable between 0-20 mA and 0-10 V or 4-20 mA and 2-10 V.

Function

A constant measuring voltage is applied to the potentiometer in case of 3-wire circuits. The measuring signal generated via the center tap is amplified and transformed into an impressed direct current or in an impressed direct voltage. In case of the 2-wire circuit, the measuring signal is generated using a constant current. The galvanic isolation is realized using an optocoupler. Both outputs are no-load proof and short-circuit proof. Connecting the two outputs is not permissible. An auxiliary voltage is required.

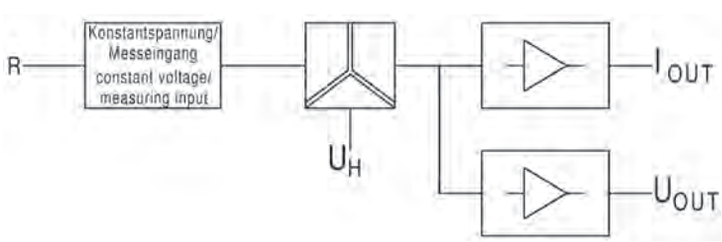

Connection

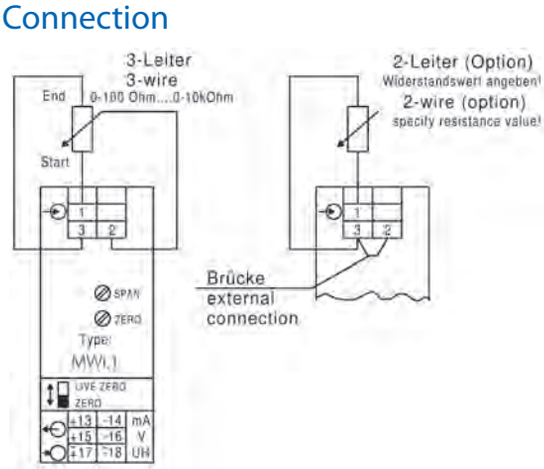

Technical data

Input	Input variable	Resistance
	Rated values	3-wire: arbitrary value between 0-100 ˙ t o 0-10 k ˙
		2-wire: 0-100 ˙ , 0-500 ˙ , 0-1000 ˙ , other values on request
Output	Output variables	Double output
	Rated values	0-20 mA / 500 ˙ load and 0-10 V / max. load 10 mA
		as well as 4-20 mA / 500 ˙ load and 2-10 V / max. load 10 mA
		switchable on the front side
Transmission behavior	Accuracy	± 0.5 %
	Temperature range	- 15 °C to +20 °C to +30 °C to +55 °C
	Temperature inf uence	< 0.2 % at 10 K
	Auxiliary voltage influence	no
	Load inf uence	no
	External magnetic f eld inf uence	no (400 A/m)
	Residual ripple	< 30 mVss
	Response time	< 300 ms
	Open-circuit voltage	max. 24 V
	Current limiting	max. 2-fold in case of overload
	Test voltage	4 kV between input, output, auxiliary voltage
Auxiliary voltage		230 V AC ± 20 %, 45-65 Hz, 2.5 VA
	Options	● 110 V AC ± 20 %, 45-65 Hz, 2.5 VA
		● 24 V DC - 15 % to + 25 %, 2 W
		● 6-30 V AC + DC, 2 VA
		● 36-265 V AC + DC, 2 VA
Dimensions	Housing	Housing A, (22.5 mm wide) Page A1
Weight		170 g
Installation	Fastening	Snap-on fastening on top hat rail 35 mm accord. to DIN EN 60 715
	Electrical connection	Screw terminal max. 4 mm²

Measuring transducer for summation

Type:

MSUM.1

Application

The measuring transducer MSUM.1 is used for the transformation and isolation of the sum of several direct currents into an impressed direct current and direct voltage signal. The calibrated double outputs are switchable between 0-20 mA and 0-10 V or 4-20 mA and 2-10 V.

Function

The up to 5 direct currents are converted in direct voltages using shunts and added up. The direct voltage thus generated is galvanically isolated using an optocoupler, amplified and transformed into an impressed direct current or in an impressed direct voltage. The output is no-load and short-circuit proof. Connecting the two outputs is not permissible. An auxiliary voltage is required.

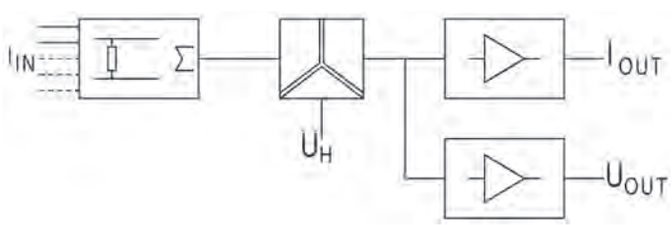

Connection

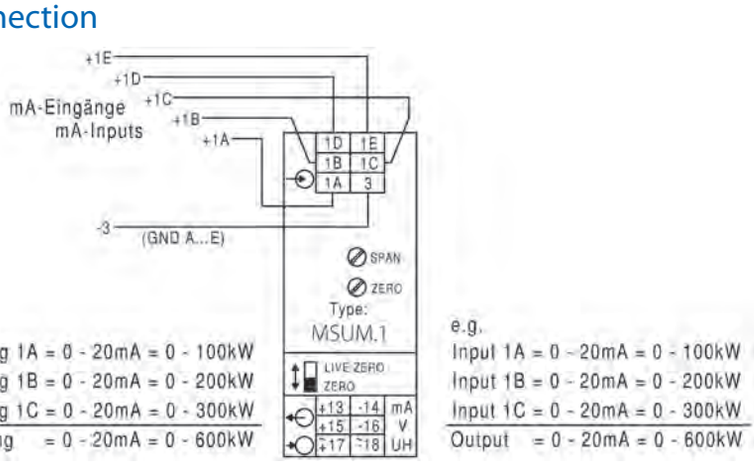

Technical data

Input	Input variable	Direct current
	Rated values	max. 5 direct currents of 0-20 mA or 4-20 mA, Ri = 3 ˙
		It is possible to factory-assign each input a valence, e.g.
		Input 1A = 0-20 mA corresponds to 0-150 kW => valence 0.25
		Input 1B = 0-20 mA corresponds to 0-150 kW => valence 0.25
		Input 1C = 0-20 mA corresponds to 0-300 kW => valence 0.5
		Output 0-20 mA corresponds to 0-600 kW => valence 1.0
		Please, specify in order!
	Overload permanent	2-fold
	High surge load	20-fold, 1 s
Output	Output variables	Double output
	Rated values	0-20 mA / 500 ˙ load and 0-10 V / max. load 10 mA
		as well as 4-20 mA / 500 ˙ load and 2-10 V / max. load 10 mA
		switchable on the front side
Transmission behavior	Accuracy	± 0.5 %
	Temperature range	-15 °C to +20 °C to +30 °C to + 55 °C
	Temperature inf uence	< 0.3 % at 10 K
	Auxiliary voltage influence	no
	Load inf uence	no
	External magnetic f eld inf uence	no (400 A/m)
	Residual ripple	< 30 mVss
	Response time	< 300 ms
	Open-circuit voltage	max. 24 V
	Current limiting	max. 2-fold in case of overload
	Test voltage	4 kV between input, output, auxiliary voltage
Auxiliary voltage		230 V AC ± 20 %, 45-65 Hz, 2.5 VA
	Options	● 110 V AC ± 20 %, 45-65 Hz, 2.5 VA
		● 24 V DC, - 15 % to + 25 %, 2 W
		● 6-30 V AC + DC, 2 VA
		● 36-265 V AC + DC, 2 VA
Dimensions	Housing	Housing A, (22.5 mm wide) Page A1
Weight		190 g
Installation	Fastening	Snap-on fastening on top hat rail 35 mm accord. to DIN EN 60 715
	Electrical connection	Screw terminal max. 4 mm²

Dimensions

for measuring transducers

Housing „A“ Housing „B“

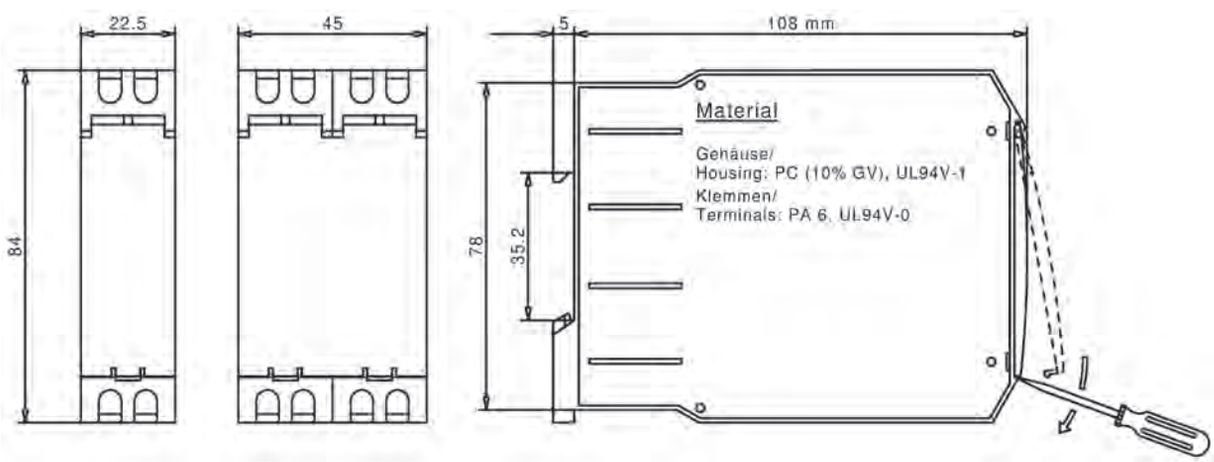

Housing „C“

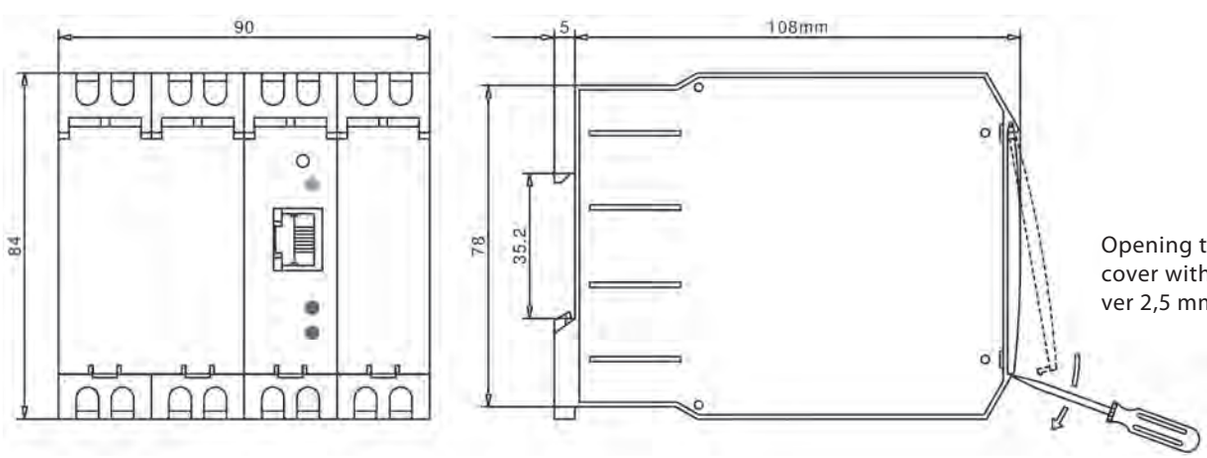

Opening the front cover with screwdriver 2,5 mm

Housing „D“

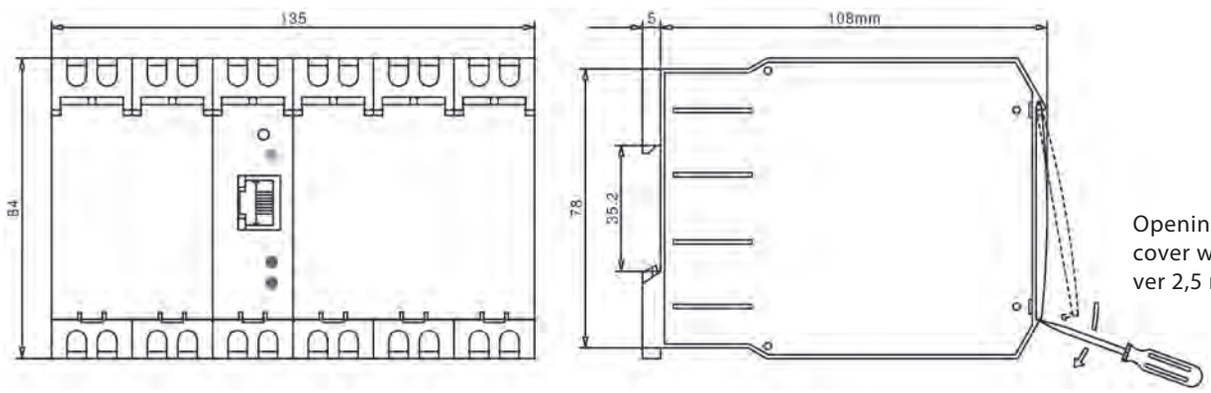

Opening the front cover with screwdriver 2,5 mm

Housing „E“

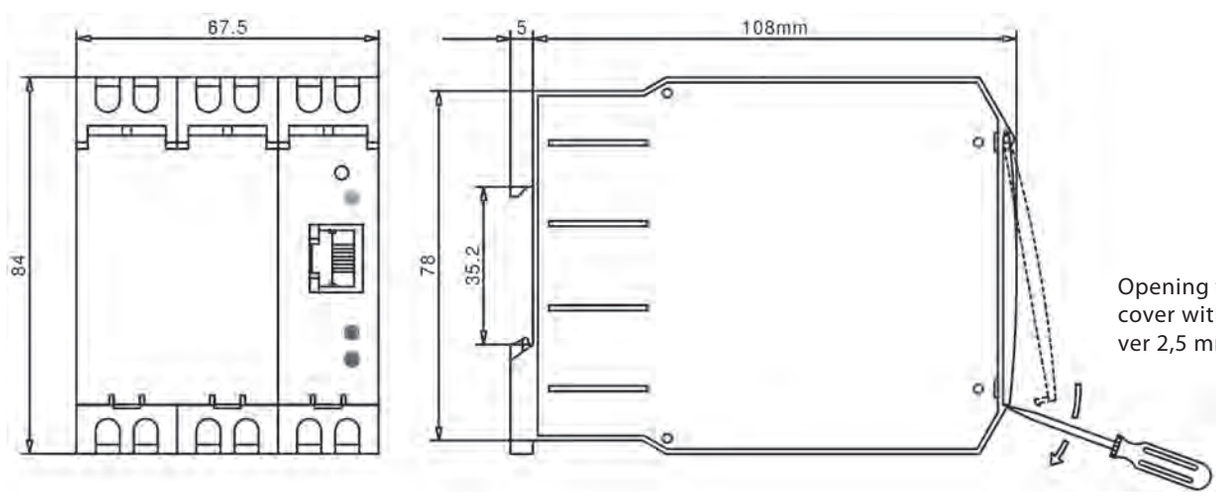

Opening the front cover with screwdriver 2,5 mm

The data contained in the product catalog are to the best of my knowledge and belief. Changes and errors are reserved. similar pictures provide any terms within the meaning of § represents 305 I BGB. There are notes without independent regulatory content that bring only expressed that the information contained in the catalog so far are preliminary and non-binding, as before or at the conclusion of a contract yet can be corrected. A contractual arrangements content, in particular a possible restriction of the rights of the contracting party in liability-or warranty legal terms, these instructions can not be removed.

Gilgen, Müller & Weigert (GMW) GmbH & Co. KG
Am Farrnbach 4A
90556 Cadolzburg

☎ +49 (0) 9103 7129-0
🖷 +49 (0) 9103 7129-205/207
E-Mail: info@g-mw.de
Internet: www.g-mw.de

Manager: Prof. Dr. h.c. Wolfgang Gilgen

TAX: DE815535316

More information you will find at

www.g-mw.de

Stand: 2017-04
Reserve technical changes
27867 10008